CDL/CDLF立式离心泵Vertical Centrifugal Pump

描述Introduction

CDL/CDLF**立式多级离心泵**是一种多功能产品，可以输送从自来水到工业液体的各种不同介质，适应于不同温度、流量和压力范围，CDL适用于轻度腐蚀性液体;CDLF立式不锈钢多级泵适用于轻度腐蚀性液体。

CDL/CDLF vertical multistage centrifugal pump is a multi-functional product, can transport a variety of different media from tap water to industrial liquid, adapt to different temperature, flow and pressure range, CDL is suitable for mildly corrosive liquid; CDLF vertical stainless steel multistage pump is suitable for mildly corrosive liquids.

应用范围 Application:

供水：水厂过滤与输送、水厂分区送水、主管增压、高层建筑增压。

Water supply: water plant filtration and transportation, water plant zoning water supply, supercharging, supercharging in high-rise buildings.

工业增压：流程水系统、清洗系统、高压冲洗系统、消防系统。

Industrial pressurization: process water system, cleaning system, high pressure flushing system, fire protection system.

工业液体输送：冷却和空调系统、锅炉给水和冷凝系统、机床配套、酸和碱。

Industrial liquid delivery: cooling and air conditioning systems, boiler water supply and condensation systems, machine tools, acid and alkali.

水处理：超滤系统、反渗透系统、蒸馏系统、分离器、游泳池。

Water treatment: ultrafiltration system, reverse osmosis system, distillation system, separator, swimming pool.

灌溉：农田灌溉、喷灌、滴灌。

Irrigation: farm irrigation, sprinkling irrigation, drip irrigation.

运行条件operation condition:

♦稀薄，干净，非易燃易爆并不含固体颗粒或纤维的液体。 Thin, dry, non-flammable, explosive liquid, without solid particles or fibers.

♦液体温度：常温型热水型Liquid temperature: normal temperature hot water type

♦环境温度：最高+40'CAmbient temperature: maximum +40'C

♦海拔：最高1000mAltitude: up to 1000m

电机Motor

♦电机为全封闭风冷式二极标准电机The motor is a fully enclosed air-cooled bipolar standard motor

♦防护等级class:IP55

♦绝缘等级**insulation**： F

♦标准电压 **voltage** :50HZ: 1 x 220-230/240V

3 x 200-220/346-380V

3 x 200-24/380-415V

3 x 380-415V

产品型号Ordering Code

CDL F 32 – 80 – 2 F S W S C

- C: C:常温型normal temperature; R:热水型Hot water; J:耐弱腐蚀性机封Machine seal with weak corrosion resistance Y:耐油机封Oil machine；Q:其他机封Other machine sealing
- S: S:304; L:316L
- W: W:500Hz;L:6Hz
- S: S:三相three phase；D:单相single phase
- F: F:法兰Flange ; K:卡套Cutting ferrule ;L:螺纹Pipe thread；Y:腰形法兰Oval Flange
- 2: 小叶轮数Number of small impeller
- 80: 级数x10 Stage x 10
- 32: 额定流量（m3/h）rated flow
- F: 过滤部件为不锈钢304或316L Flow passage
- CDL: 轻型立式多极离心泵Light vertical multistage centrifugal pump

技术参数 Technical Specification

说明Description	CDL1	CDL2	CDL3	CDL4	CDL8	CDL10	CDL12	CDL16	CDL20	CDL32	CDL42	CDL65	CDL85	CDL20	CDL150	CDL200
额定流量Rate flow [m³/h]	1	2	3	4	8	10	12	16	20	32	42	65	85	120	150	200
额定流量Rate flow [l/s]	0.28	0.56	0.83	1.1	2.2	2.78	3.3	4.4	5.6	8.9	11.7	18	24	33	41.6	55.6
流量范围Flow range [m³/h]	0.4-2	1-3.5	1.2-4	1.5-7	5-12	5-13	7-16	8-22	10-28	16-40	25-55	30-80	50-110	60-150	80-180	10-240
流量范围 Flow range [L/s]	0.11-0.56	0.28-0.97	0.33-1.1	0.42-1.9	1.4-3.3	1.4-3.61	1.9-4.4	2.2-6.1	2.8-7.8	4.4-11.1	6.9-15.3	8.3-22.2	13.8-30.5	16.7-41.7	22-50	27.8-6.7
最大压力 Max. pressure [bar]	21	23	22	21	21	22	22	22	23	29	30	22	17	16	16	16
电机功率 Motor power [kW]	0.37-2.2	0.37-3	0.37-3	0.37-4	0.75-7.5	0.75-7.5	1.5-11	2.2-15	1.1-18.5	1.5-30	3.0-45	4.0-45	5.5-45	11-75	11-75	18.5-110
温度范围 Temp. [C]	-15 ～+ 120															
最高效率 Max. efficiency [%]	44	46	54	57	62	68	63	66	69	73	75	76	77	74	73	79
类型Type																
CDL	•	•	•	•	•	•	•	•	•	•	•	•	•	•	•	•
CDLF	•	•	•	•	•	•	•	•	•	•	•	•	•	•	•	•
CDL管路联接CDL Pipe connection																
DIN法兰Flange	DN25	DN25	DN25	DN32	DN40	DN40	DN50	DN50	DN50	DN65	DN80	DN100	DN100	DN125	DN125	DN150
腰形法兰 Oval Flange	G1	G1	G1	G1 1/4	G1 1/2	G1 1/2										
CDLF管路连接																
DIN法兰Flange	DN25	DN25	DN25	DN32	DN40	DN40	DN5O	DN5O	DN50	DN65	DN80	DN100	DN100	DN125	DN125	DN150
卡套接头 Cutting ferrule joint	DN32	DN32	DN32	DN32	DN5O	DN50	DN5O	DN5O	DN50							
管螺纹 Pipe thread	ZG1 1/4	ZG1 1/4	ZG1 1/4	ZG1 1/4	ZG2	ZG2	ZG2	ZG2	ZG2							
腰形法兰 Oval Flange	G1	G1	G1	G1 1/4	G1 1/2											

流量图Performance curve

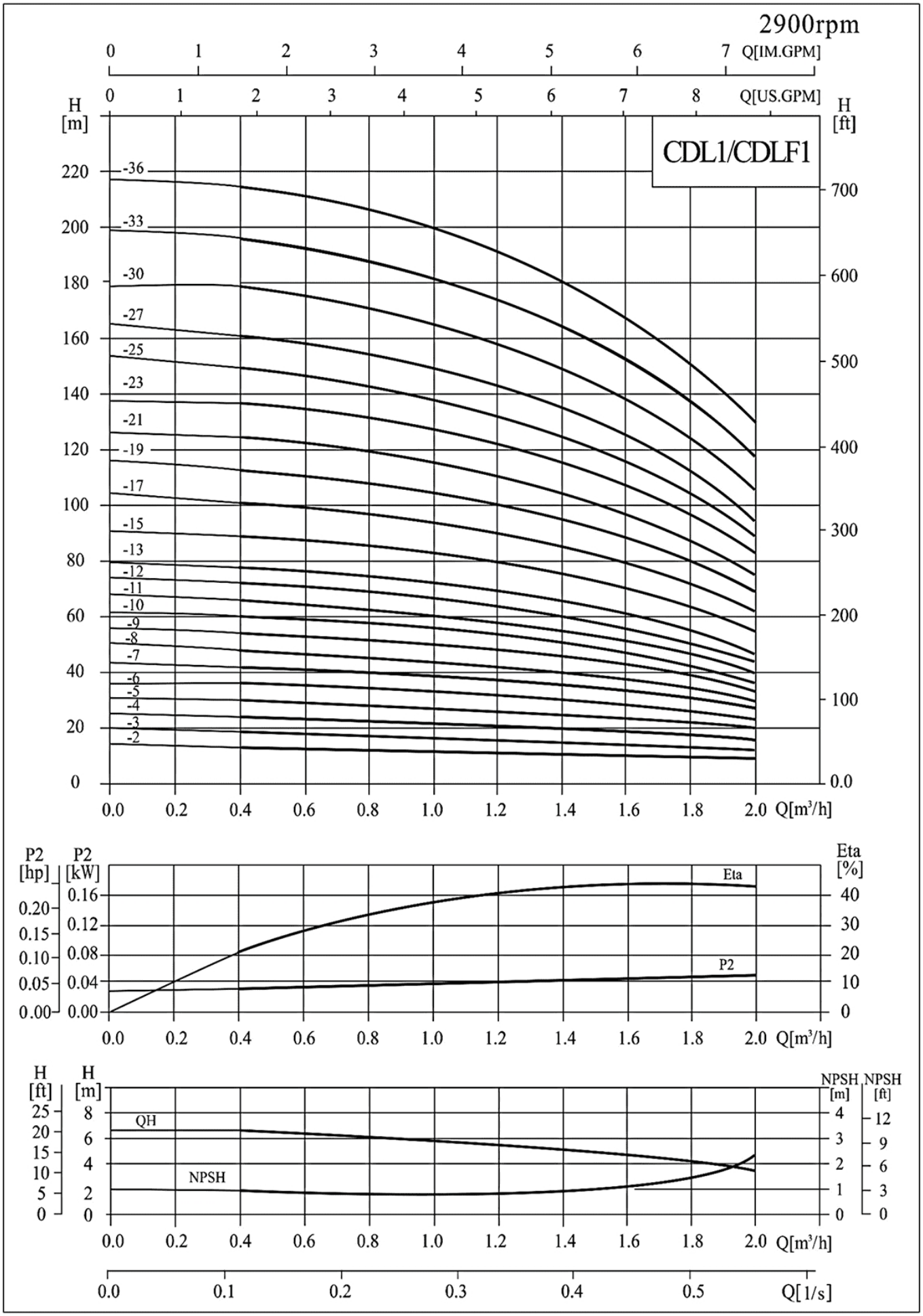

CDL1技术参数Technical Specification

型号Model	配用电机 Driving motor (kW)	Q (m³/h)	0.4	0.6	0.8	1.0	1.2	1.4	1.6	1.8	2.0
CDL1-2	0.37		13	12.5	12	11.5	11	10.5	10	9.5	9
CDL1-3	0.37		19	18	17.5	17	16.5	16	15	14	12
CDL1-4	0.37		24	23.5	23	22.5	21.5	21	19	18	16
CDL1-5	0.37		30	29.6	29	28	27	26	24	22	20
CDL1-6	0.37		36	35.5	35	33.5	33	31	28	26	23
CDL1-7	0.37		42	41	40.5	39	38	36	33	30	27
CDL1-8	0.55		4S	47	46	45	43	41	38	34	30
CDL1-9	0.55		54	53	52	51	49	46	43	39	33
CDL1-10	0.55		60	59	58	57	54	51	48	43	36
CDL1-11	0.55		66	65	63	61	59	56	52	47	40
CDL1-12	0.75	H	72	71	69	67	64	61	57	51	44
CDL1-13	0.75	(m)	78	77	75	73	69	66	62	55	47
CDL1-15	0.75		89	88	86	84	79	76	71	63	55
CDL1-17	1.1		101	99	97	95	89	86	80	71	62
CDL1-19	1.1		113	110	108	106	99	96	89	79	69
CDL1-21	1.1		124	122	120	117	110	106	98	87	75
CDL1-23	1.1		137	133	131	128	121	116	107	96	82
CDL1-25	1.5		149	145	143	139	131	126	116	104	89
CDL1-27	1.5		161	157	155	150	141	136	125	112	95
CDL1-30	1.5		178	175	171	166	157	150	139	124	106
CDL1-33	2.2		196	192	188	183	173	165	154	137	118
CDL1-36	2.2		214	210	205	200	190	181	169	151	130

外形尺寸图 Overall and Dimensions Figure

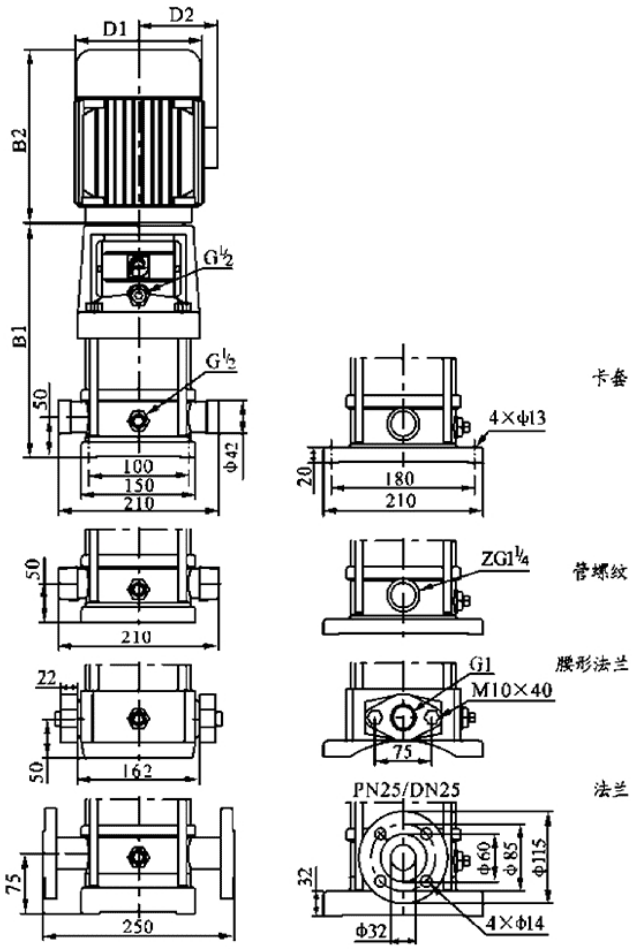

型号Model	尺寸Size(mm)					重量 Weight (kg)
	Bl	B2	B1+B2	Dl	D2	
CDL1-2	258	225	483	148	117	20
CDL1-3	276	225	501	148	117	20
CDL1-4	294	225	519	148	117	21
CDL1-5	312	225	537	148	117	21
CDL1-6	330	225	555	148	117	22
CDL1-7	348	225	573	148	117	23
CDL1-8	366	225	591	148	117	24
CDL1-9	384	225	609	148	117	25
CDL1-10	402	225	627	148	117	26
CDL1-11	420	225	645	148	117	26
CDL1-12	448	245	693	170	142	29
CDL1-13	466	245	711	170	142	30
CDL1-15	502	245	747	170	142	31
CDL1-17	538	245	783	170	142	33
CDL1-19	574	245	819	170	142	34
CDL1-21	610	245	855	170	142	35
CDL1-23	646	245	891	170	142	36
CDL1-25	692	290	982	190	155	42
CDL1-27	728	290	1018	190	155	43
CDL1-30	782	290	1072	190	155	45
CDL1-33	836	290	1126	190	155	49
CDL1-36	890	290	1180	190	155	51

流量图Performance curve

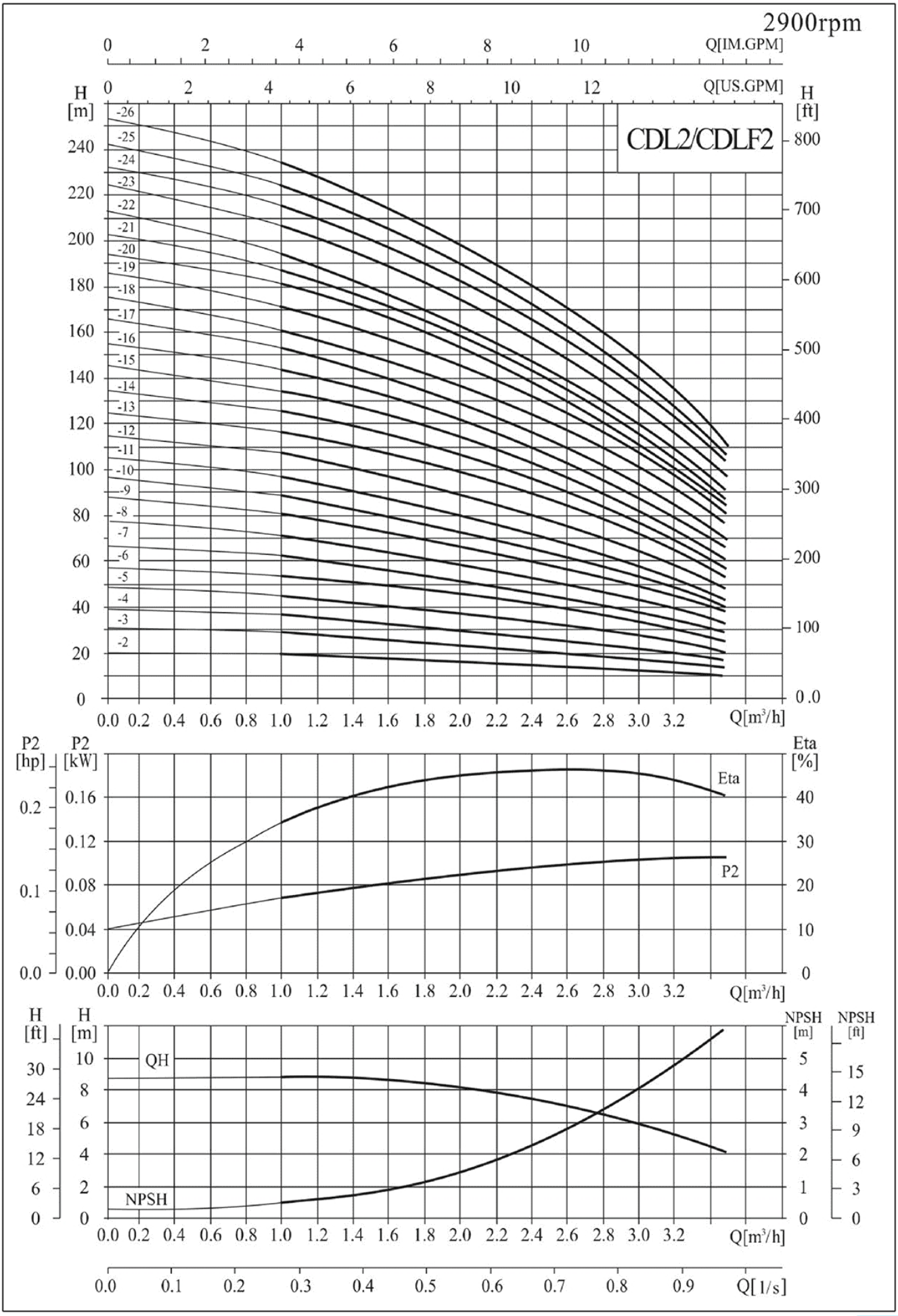

CDL2技术参数Technical Specification

型号Model	配用电机 Driving motor (kW)	Q (m³/h)	1	1.2	1.6	2.0	2.4	2.8	3.2	3.5
CDL2-2	0.37		18	17	16	15	13	12	10	8
CDL2-3	0.37		27	26	24	22	20	18	15	12
CDL2-4	0.55		36	35	33	30	26	24	20	16
CDL2-5	0,55		45	43	40	37	33	30	24	20
CDL2-6	0.75	H	53	52	50	45	40	36	30	24
CDL2-7	0.75	(m)	63	61	57	52	47	41	35	28
CDL2-9	1.1		80	78	73	67	61	54	45	37
CDL2-11	1.1		98	95	89	82	73	64	54	44
CDL2-13	1.5		116	114	106	98	89	78	65	52
CDL2-15	1.5		134	130	123	112	100	90	73	60
CDL2-18	2.2		161	157	148	136	121	108	91	76
CDL2-22	2.2		197	192	180	165	148	130	110	90
CDL2-26	3.0		232	228	214	198	179	158	130	110

外形尺寸图 Overall and Dimensions Figure

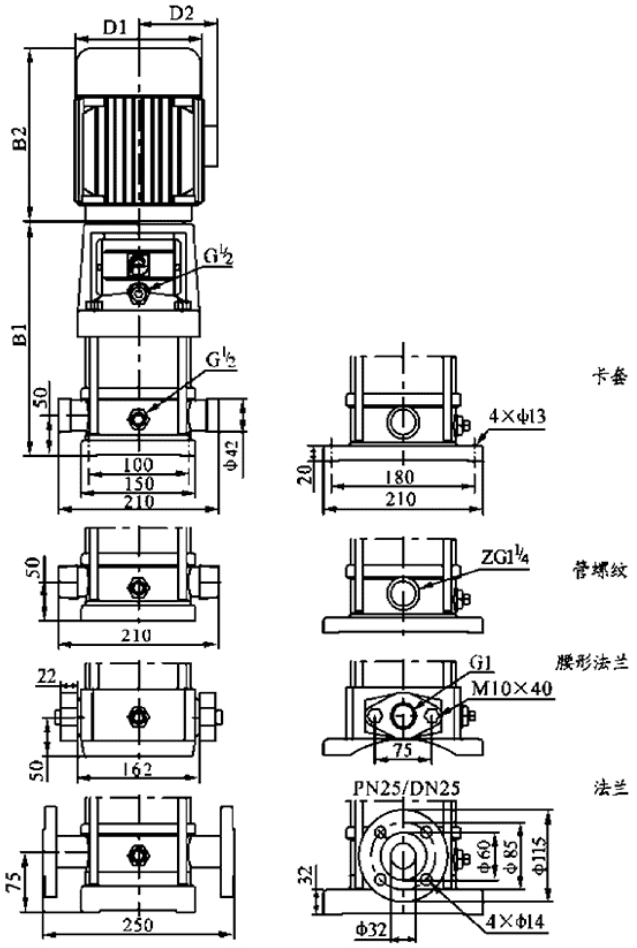

型号Model	尺寸Size (mm)					重量 Weight (kg)
	B1	B2	B1+B2	D1	D2	
CDL2-2	258	225	483	148	117	20
CDL2-3	276	225	501	148	117	20
CDL2-4	294	225	519	148	117	22
CDL2-5	312	225	537	148	117	23
CDL2-6	340	245	585	170	142	26
CDL2-7	358	245	603	170	142	26
CDL2-9	394	245	639	170	142	28
CDL2-11	430	245	675	170	142	29
CDL2-13	476	290	766	190	155	35
CDL2-15	512	290	802	190	155	36
CDL2-18	566	290	856	190	155	41
CDL2-22	638	290	928	190	155	42
CDL2-26	720	345	1065	197	165	52

流量图Performance curve

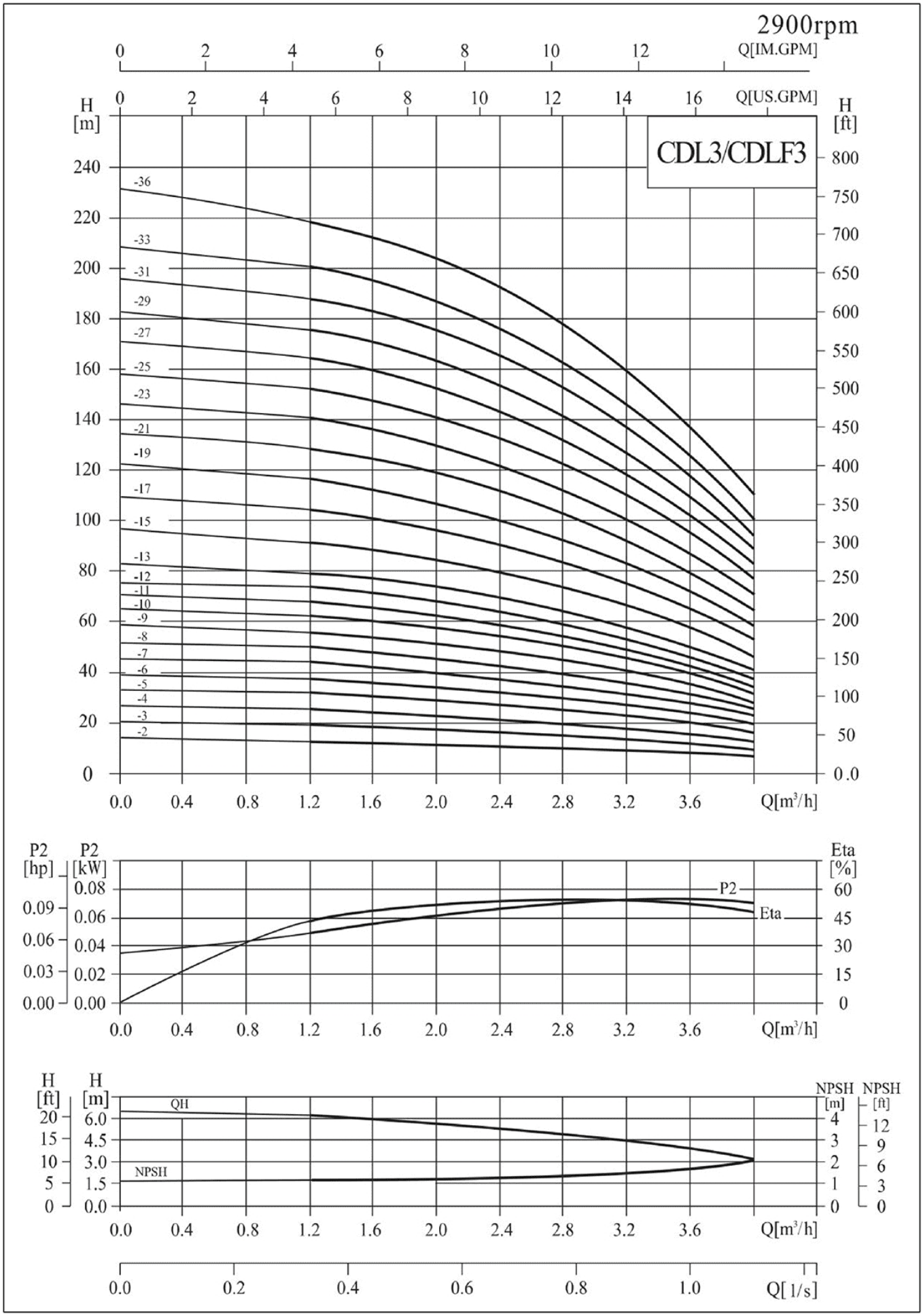

CDL3技术参数Technical Specification

型号Model	配用电机 Driving motor (kW)	Q (m³/h)	12	1.6	2.0	2.4	2.8	3.0	3.2	3.6	4.0
CDL3-2	037		12.5	11.5	11	10.5	10	9	8	7	6
CDL3-3	037		19	18.5	17.5	16.5	15	14	13	11	9
CDL3-4	0.37		25	24	23	21,5	20	19	18	15	12
CDL3-5	037		31	30	29	27	25	23	22	19	16
CDL3-6	0.55		36	35	34	32	30	28	27	23	19
CDL3-7	0.55		43	41	39	37	34	32	31	27	22
CDL3-8	0.75		49	47	45	43	39	37	35	31	25
CDL3-9	0.75		55	53	51	48	45	42	40	35	28
CDL3-10	0.75	H	61	59	57	54	50	47	45	39	31
CDL3-11	1.1	(m)	67	64	61	58	54	51	49	42	34
CDL3-12	1.1		73	70	67	63	58	55	52	45	37
CDL3-13	1.1		78	76	73	69	64	60	57	49	40
CDL3-15	1.1		90	88	84	79	73	69	66	57	46
CDL3-17	1.5		103	100	96	90	83	79	75	64	52
CDL3-19	1.5		115	112	107	100	92	88	83	72	58
CDL3-21	2.2		128	124	119	112	102	98	91	79	64
CDL3-23	2.2		140	135	130	122	112	107	100	86	70
CDL3-25	2.2		151	147	141	131	122	116	109	94	76
CDL3-27	2.2		164	159	152	143	132	124	117	101	82
CDL3-29	2.2		175	170	163	153	142	133	126	109	88
CDL3-31	3.0		187	182	175	165	153	142	135	116	94
CDL3-33	3.0		199	194	187	176	163	151	145	125	100
CDL3-36	3.0		218	212	204	192	178	168	159	137	109

外形尺寸图 Overall and Dimensions Figure

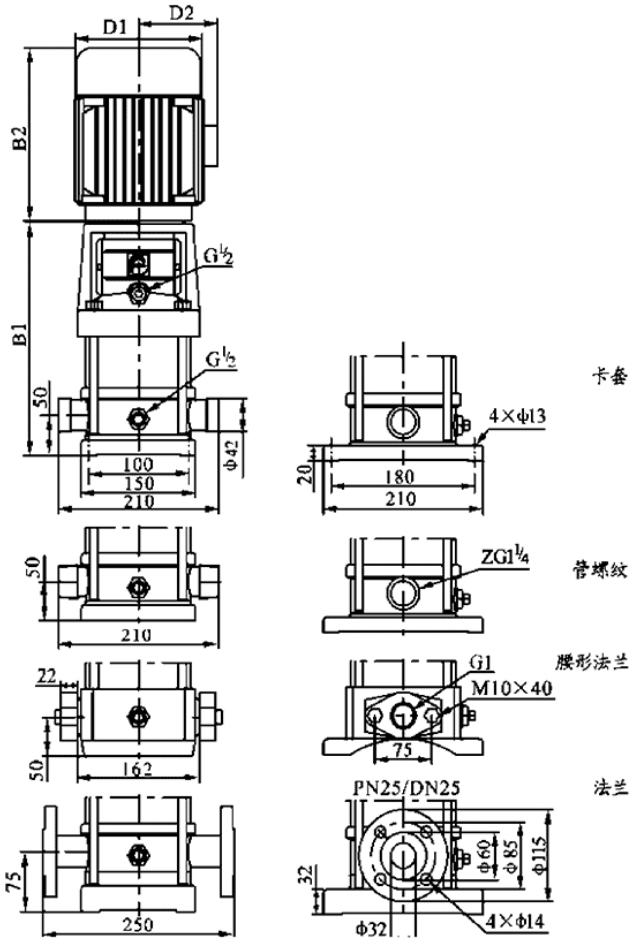

型号Model	尺寸Size (mm)					重量 Weight (kg)
	Bl	B2	B1+B2	Dl	D2	
CDL3-2	258	225	483	148	117	20
CDL3-3	276	225	501	148	117	20
CDL3-4	294	225	519	148	117	21
CDL3-5	312	225	537	148	117	21
CDL3-6	330	225	555	148	117	23
CDL3-7	348	225	573	148	117	24
CDL3-8	376	245	621	170	142	27
CDL3-9	394	245	639	170	142	28
CDL3-10	412	245	657	170	142	28
CDL3-11	430	245	675	170	142	29
CDL3-12	448	245	693	170	142	30
CDL3-13	466	245	711	170	142	31
CDL3-15	502	245	747	170	142	32
CDL3-17	548	290	838	190	155	38
CDL3-19	584	290	874	190	155	39
CDL3-21	620	290	910	190	155	42
CDL3-23	656	290	946	190	155	43
CDL3-25	692	290	982	190	155	44
CDL3-27	728	290	1018	190	155	45
CDL3-29	764	290	1054	190	155	46
CDL3-31	810	345	1155	197	165	54
CDL3-33	846	345	1191	197	165	55
CDL3-36	900	345	1245	197	165	57

流量图Performance curve

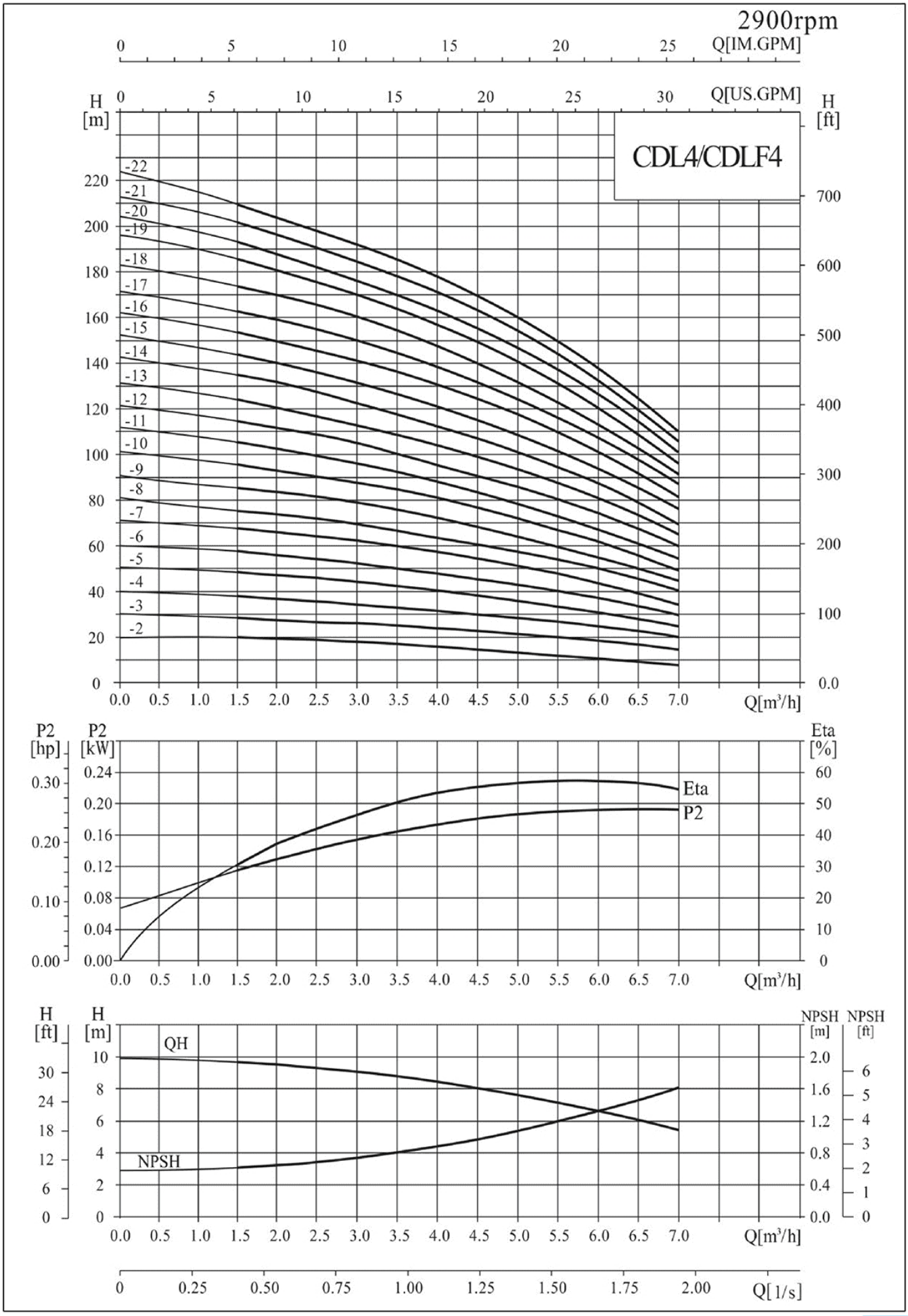

CDL4技术参数Technical Specification

型号Model	配用电机 Driving motor (kW)	Q (m³/h)	1.5	2.0	3.0	4.0	5.0	6.0	7.0
CDL4-2	0.37	H (m)	19	18	17	15	13	10	8
CDL4-3	0.55		28	27	26	24	20	18	13
CDL4-4	0.75		38	36	34	32	27	24	19
CDL4-5	1.1		47	45	43	40	34	31	23
CDL4-6	1.1		56	54	52	48	41	37	28
CDL4-7	1.5		66	63	61	56	48	43	33
CDL4-8	1.5		74	72	70	64	55	50	38
CDL4-10	2.2		96	90	87	81	71	62	48
CDL4-12	2.2		114	108	104	95	85	75	58
CDL4-14	3.0		136	126	122	112	101	89	68
CDL4-16	3,0		152	144	140	129	115	101	78
CDL4-19	4.0		183	171	168	153	137	122	93
CDL4-22	4.0		211	200	192	178	160	138	108

外形尺寸图 Overall and Dimensions Figure

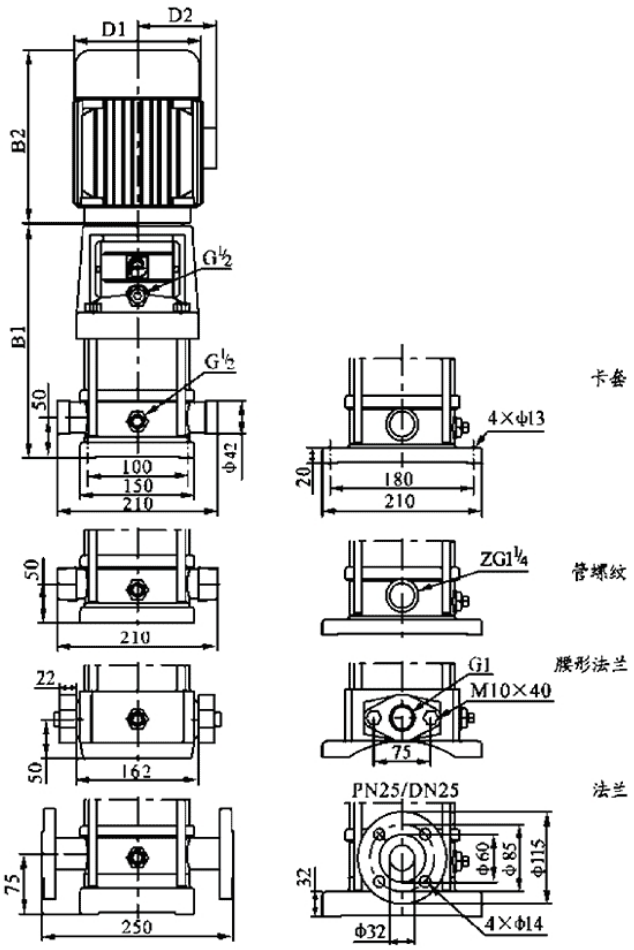

型号Model	尺寸Size (mm)					重量 Weight (kg)
	B1	B2	B1+B2	D1	D2	
CDL4-2	276	225	501	148	117	21
CDL4-3	303	225	528	148	117	22
CDL4-4	340	245	585	170	142	25
CDL4-5	367	245	612	170	142	27
CDL4-6	394	245	639	170	142	27
CDL4-7	431	290	721	190	155	33
CDU-8	458	290	748	190	155	33
CDL4-10	512	290	802	190	155	37
CDU-12	566	290	856	190	155	38
CDL4-14	630	345	975	197	165	*46*
CDL4-16	684	345	1029	197	165	48
CDL4-19	765	355	1120	230	188	57
CDL4-22	846	355	1201	230	188	59

流量图Performance curve

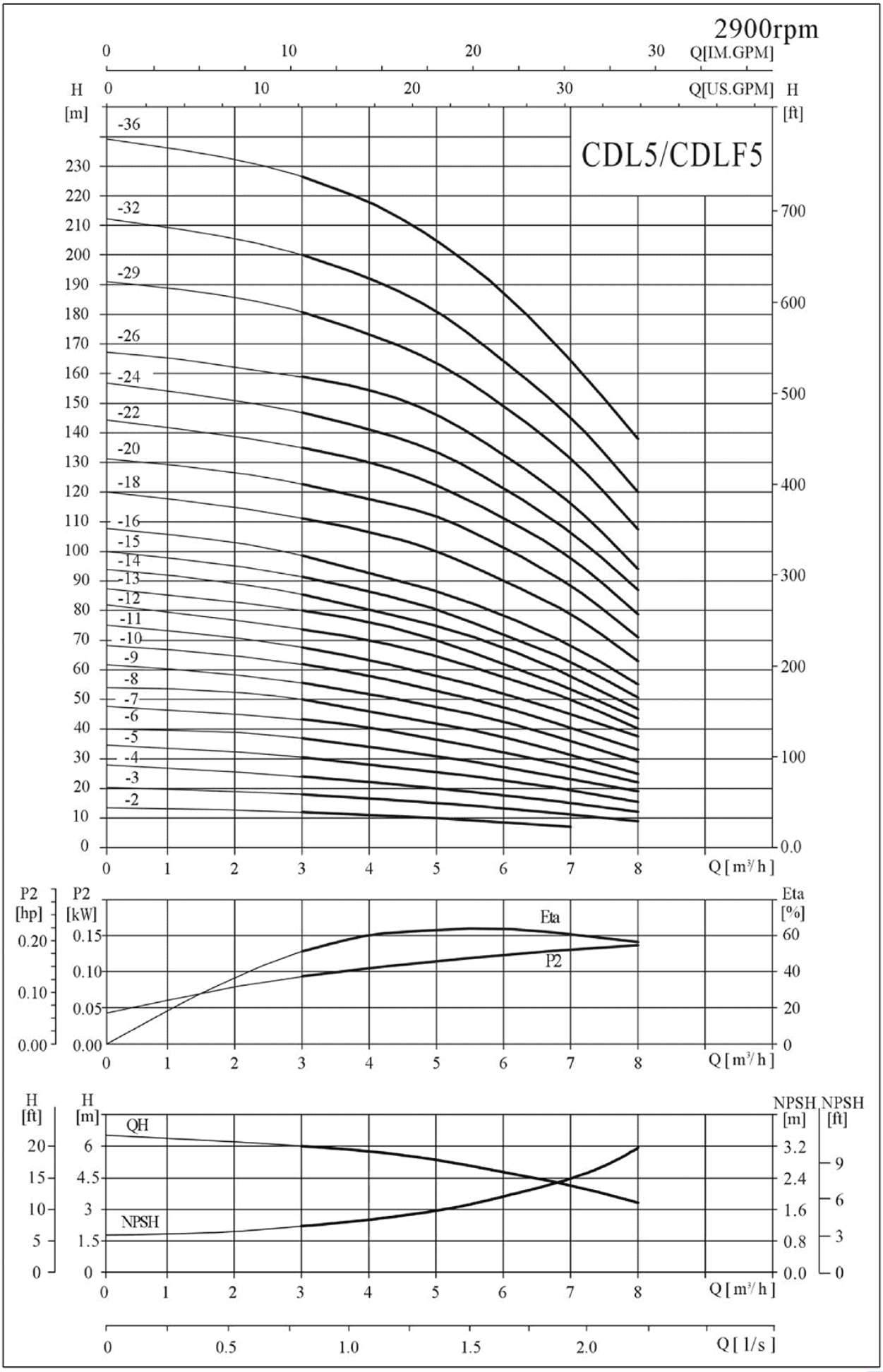

CDL5技术参数Technical Specification

型号Model	配用电机 Driving motor （Kw)	Q (m³/h)	3.0	4.0	5.0	6.0	7.0	8.0
CDL5-2	0.37		12	11	10	9	7	4.2
CDL5-3	0.55		18	17	15	14	11	9
CDL5-4	0.55		24	22	20	18	15	12
CDL5-5	0.75		31	28	26	23	19	16
CDL5-6	1.1		37	35	32	27	23	19
CDL5-7	1.1		43	41	37	33	27	22
CDL5-8	1.1		50	47	43	38	32	25
CDL5-9	1.5		56	53	48	43	37	29
CDL5-10	1.5	H	62	59	54	48	41	34
CDL5-11	2.2	(m)	68	64	59	53	46	38
CDL5-12	2.2		74	70	65	58	50	41
CDL5-13	2.2		80	76	70	62	54	44
CDL5-14	2.2		86	81	75	68	58	47
CDL5-15	2.2		92	87	81	73	63	51
CDL5-16	2.2		99	93	87	79	69	55
CDL5-18	3.0		111	106	100	90	79	63
CDL5-20	3.0		123	118	112	102	89	71
CDL5-22	4.0		135	130	123	112	99	79
CDL5-24	4.0		147	142	134	122	107	87
CDL5-26	4.0		159	155	146	133	116	94
CDL5-29	4.0		181	174	164	149	131	107
CDL5-32	5.5		200	193	181	164	145	120
CDL5-36	5.5		227	219	205	188	165	138

外形尺寸图 Overall and Dimensions Figure

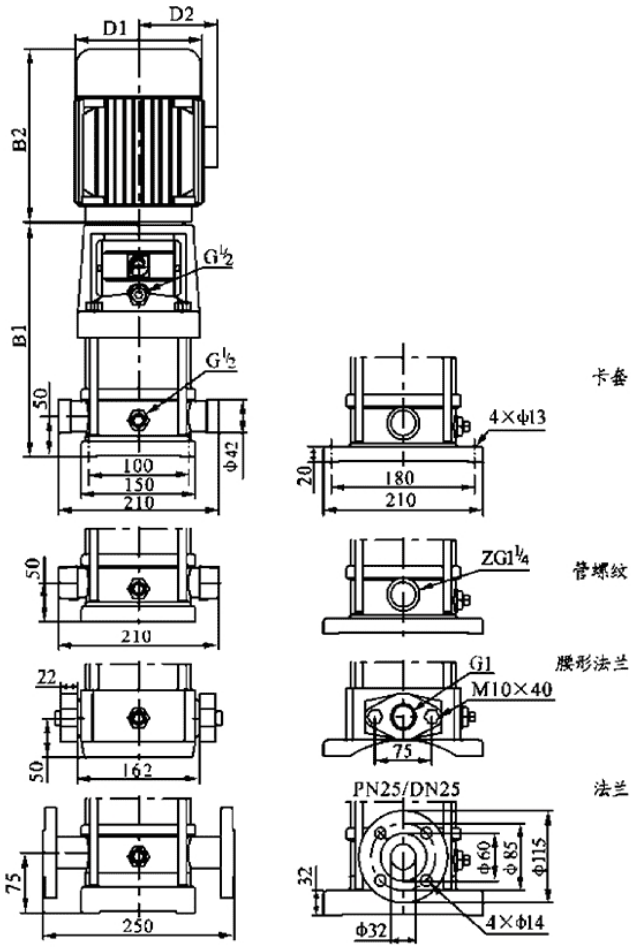

型号Model	尺寸Size (mm)					重量 Weight (kg)
	B1	B2	B1+B2	D1	D2	
CDL5-2	276	225	501	148	117	26
CDL5-3	303	225	528	148	117	27
CDL5-4	330	225	555	148	117	27
CDL5-5	367	245	612	170	142	28
CDL5-6	394	245	639	170	142	29
CDL5-7	421	245	666	170	142	29
CDL5-8	448	245	693	170	142	30
CDL5-9	485	290	775	190	155	35
CDL5-10	512	290	802	190	155	36
CDL5-11	539	290	829	190	155	40
CDL5-12	566	290	S56	190	155	41
CDL5-13	593	290	883	190	155	41
CDL5-14	620	290	910	190	155	42
CDL5-15	647	290	937	190	155	42
CDL5-16	6S4	290	974	190	155	43
CDL5-18	738	345	1083	197	165	50
CDL5-20	782	345	1127	197	165	51
CDL5-22	846	355	1201	230	188	59
CDL5-24	900	355	1255	230	188	60
CDL5-26	954	355	1309	230	188	61
CDL5-29	1035	355	1390	230	188	63
CDL5-32	1136	390	1526	260	208	85
CDL5-36	1244	390	1634	260	208	87

流量图Performance curve

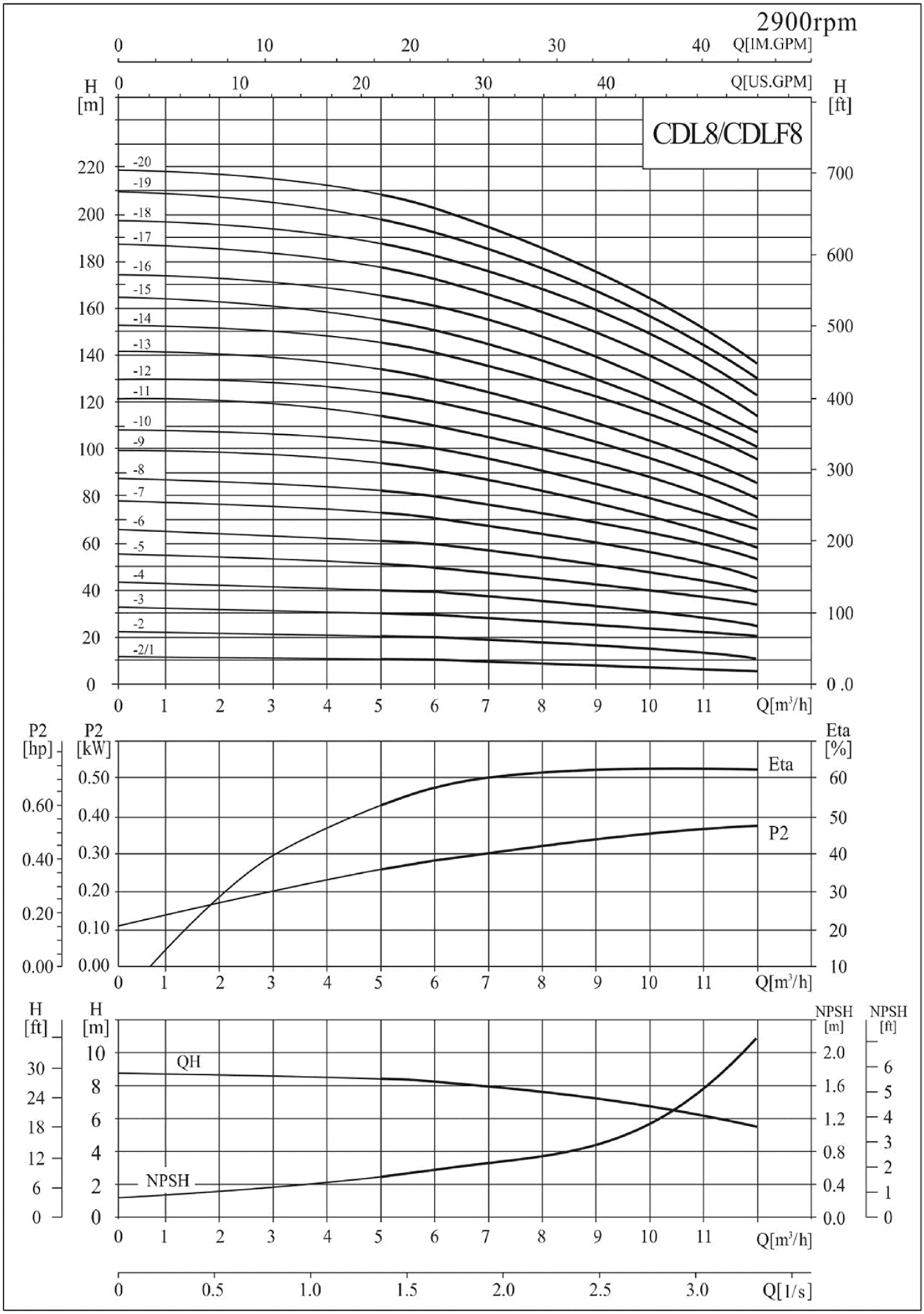

CDL8技术参数Technical Specification

型号Model	配用电机 Driving motor （Kw)	Q (m³/h)	5	6	7	8	9	10	11	12
CDL8-2/1	0.75	H (m)	10	9.5	9.3	9	8.5	8	7	6
CDL8-2	0.75		20	19.5	19	18	17	16	14	13
CDL8-3	1.1		30	29.5	28.5	27	25	24	21	19
CDL8-4	1.5		41	39.5	38	36	34	32	28	26
CDL8-5	2.2		52	50	48	45	42	40	36	32
CDL8-6	2.2		62	60	57	54	51	48	43	39
CDL8-8	3.0		83	80	77	73	69	65	58	52
CDL8-10	4.0		104	100	97	92	87	81	73	65
CDL8-12	4.0		124	120	116	111	104	92	87	78
CDL8-14	5.5		145	141	136	130	122	113	102	92
CDL8-16	5.5		166	161	156	148	139	130	118	106
CDL8-18	7.5		187	182	175	167	157	146	134	120
CDL8-20	7.5		208	202	195	186	175	163	150	135

外形尺寸图 Overall and Dimensions Figure

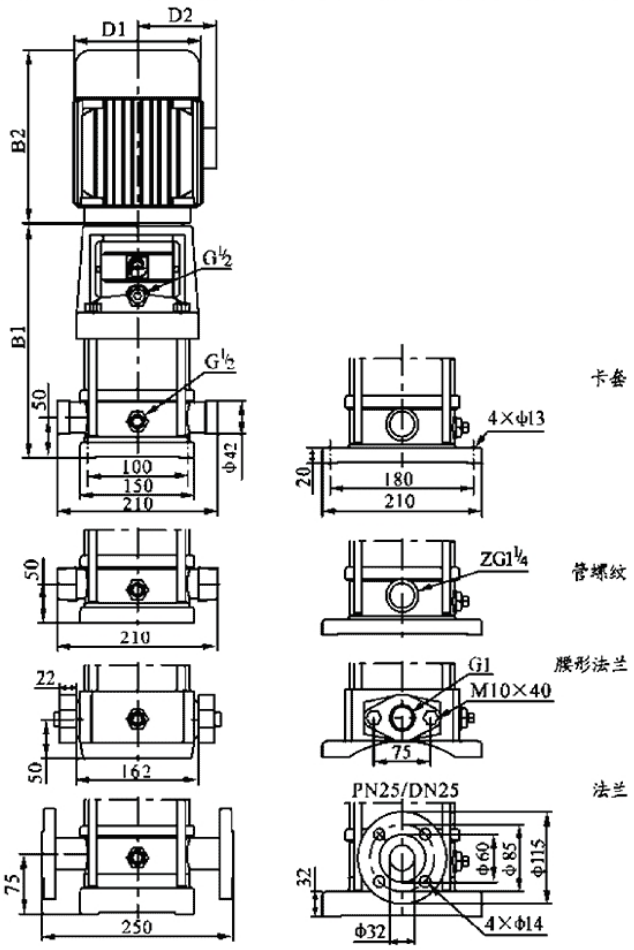

型号Model	尺寸Size (mm)					重量 Weight (kg)
	B1	B2	B1+B2	D1	D2	
CDL8-2/1	347	245	592	170	142	32
CDL8-2	347	245	592	170	142	32
CDL8-3	377	245	622	170	142	34
CDL8-4	417	290	707	190	155	40
CDL8-5	447	290	737	190	155	44
CDL8-6	477	290	767	190	155	45
CDL8-8	547	345	892	197	165	53
CDL8-10	607	355	962	230	188	64
CDL8-12	667	355	1022	230	188	66
CDL8-14	747	390	1137	260	208	81
CDL8-16	807	390	1197	260	208	84
CDL8-18	867	390	1257	260	208	93
CDL8-20	927	390	1317	260	208	94

流量图Performance curve

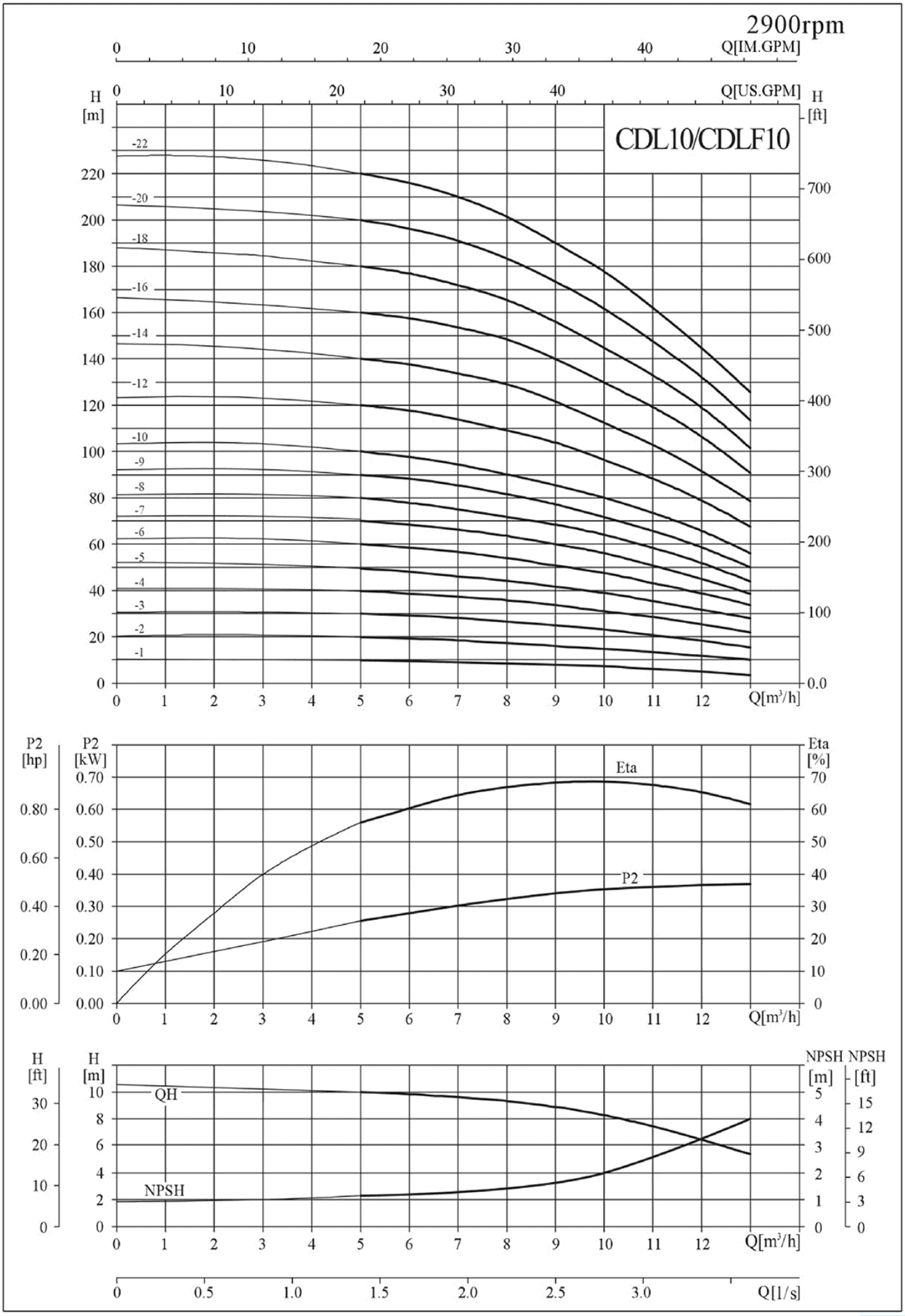

CDL10技术参数Technical Specification

型号Model	配用电机 Driving motor (kW)	Q (m³/h)	5	6	7	8	9	10	n	12	13
CDL10-1	0.75		9.7	9.3	8.9	8.3	7.7	7	6	5	4
CDL10-2	0.75		19.5	19	18	17	16	15	13.5	11.5	10
CDL10-3	1.1		29.5	29	28	27	25	23	21	18	16
CDL10-4	1.5		39.5	38.5	37.5	36	34	31	28	25	22
CDL10-5	2.2		49.5	48.5	47	44	42	39	35	32	28
CDL10-6	2.2		60	58	56	54	51	48	43	39	34
CDL10-7	3		70	68	66	63	60	56	51	45	39
CDL10-8	3	H	80	78	75	73	69	64	58	52	44
CDL10-9	3	(m)	90	87	85	81	77	72	66	58	50
CDL10-10	4		100	97	95	90	85	80	74	66	56
CDL10-12	4		120	117	114	109	104	96	89	79	68
CDL10-14	5.5		140	137	134	129	122	113	103	92	79
CDL10-16	5.5		160	158	153	148	140	129	119	106	91
CDL10-18	7.5		180	177	172	166	156	145	133	119	102
CDL10-20	7.5		200	196	191	184	173	162	147	132	114
CDL10-22	7.5		220	216	210	202	190	178	162	145	126

外形尺寸图 Overall and Dimensions Figure

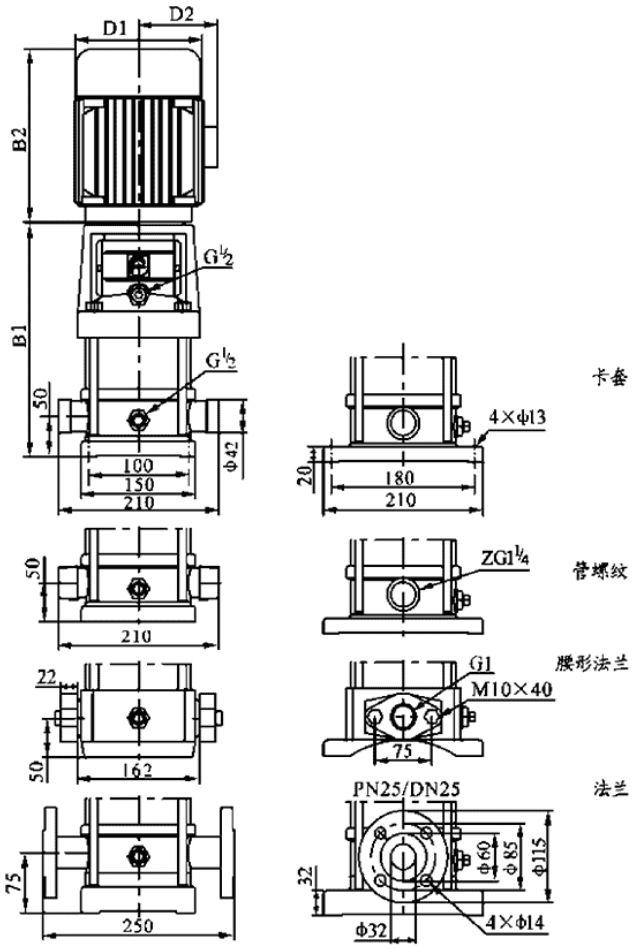

型号Model	尺寸Size (mm)					重量 Weight (kg)
	B1	B2	B1+B2	D1	D2	
CDL(F)1O-1	347	245	592	170	142	40
CDL(F)10-2	347	245	592	170	142	41
CDL(F)10-3	377	245	622	170	142	43
CDL(F)10-4	417	290	707	190	155	49
CDL(F)10-5	447	290	737	190	155	53
CDL(F)10-6	477	290	767	190	155	54
CDL(F)10-7	517	345	862	197	165	64
CDL(F)10-8	547	345	892	197	165	65
CDL(F)10-9	577	345	922	197	165	66
CDL(F)10-10	607	355	962	230	188	74
CDL(F)10-12	667	355	1022	230	188	76
CDL(F)10-14	747	390	1137	260	208	100
CDL(F)10-16	807	390	1197	260	208	102
CDL(F)10-18	867	390	1257	260	208	107
CDL(F)10-20	927	390	1317	260	208	109
CDL(F)10-22	987	390	1377	260	208	111

流量图Performance curve

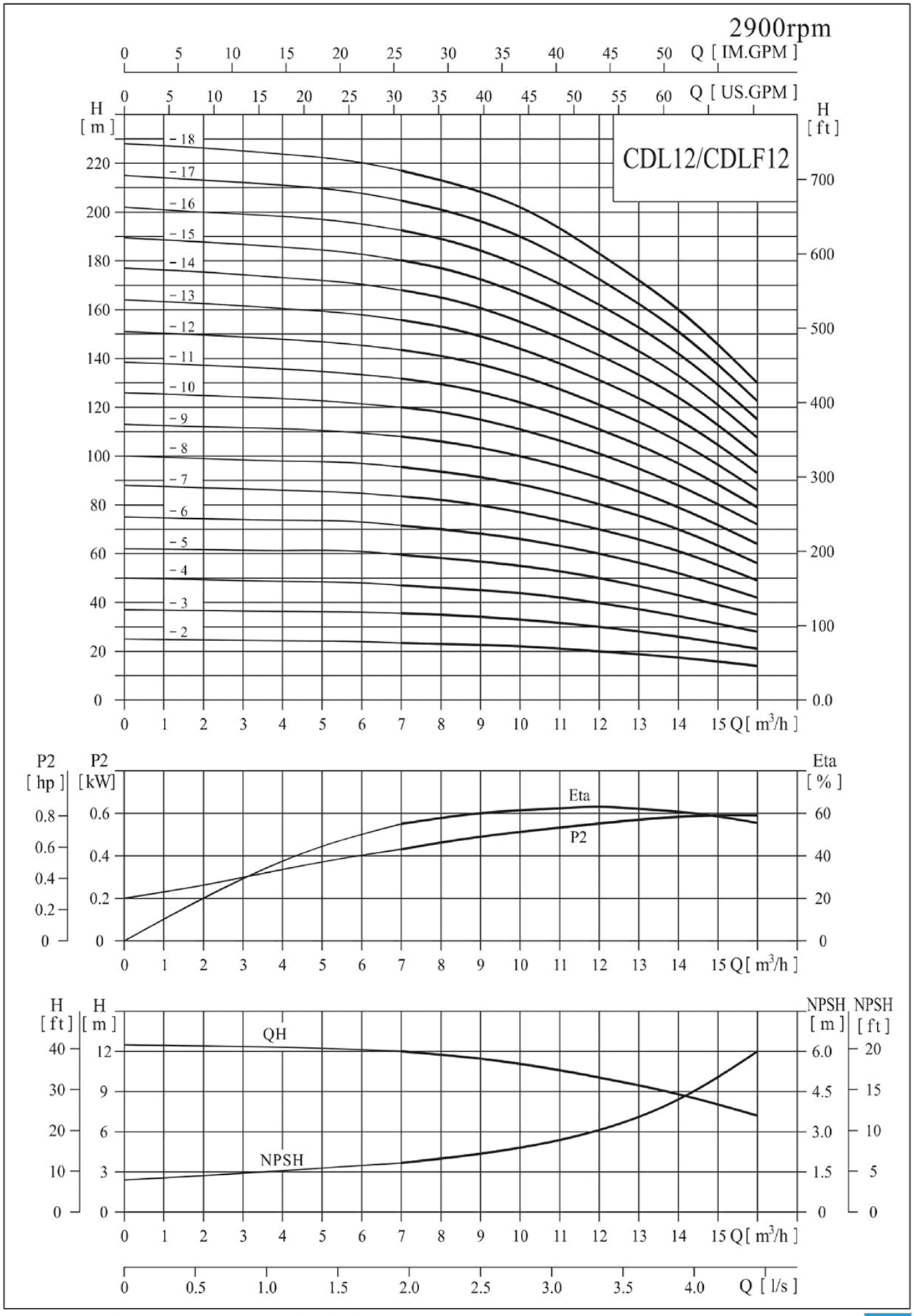

CDL12技术参数Technical Specification

型号Model	配用电机 Driving motor (kW)	Q (m³/h)	7	8	9	10	11	12	13	14	15	16
CDL12-2	1.5	H (m)	23.5	23	22.5	22	21	20	18.5	17	15.5	14
CDL12-3	2.2		35.5	35	34	33	31.5	30	28	26	23.5	21
CDL12-4	3		47	46	45	44	42	40	37	34	31	28
CDL12-5	3		59.5	58	56.5	55	52.5	50	46.5	43	39	35
CDL12-6	4		71.5	70	68	66	63	60	56	52	47	42
CDL12-7	5.5		83.5	82	79.5	77	73.5	70	65.5	61	55	49
CDL12-8	5.5		95.5	94	91	88	84	80	75	70	63	56
CDL12-9	5.5		108	106	103	100	95.5	91	85	79	71.5	64
CDL12-10	7.5		120	118	114.5	111	106	101	94.5	88	80	72
CDL12-12	7.5		143.5	141	137	133	127	121	113.5	106	96	86
CDL12-14	11		168	165	160	155	148	141	132.5	124	112	100
CDL12-16	11		192.5	189	183.5	178	170	162	152	142	128.5	115
CDL12-18	11		217	213	207.5	202	192.5	183	171.5	160	145	130

外形尺寸图 Overall and Dimensions Figure

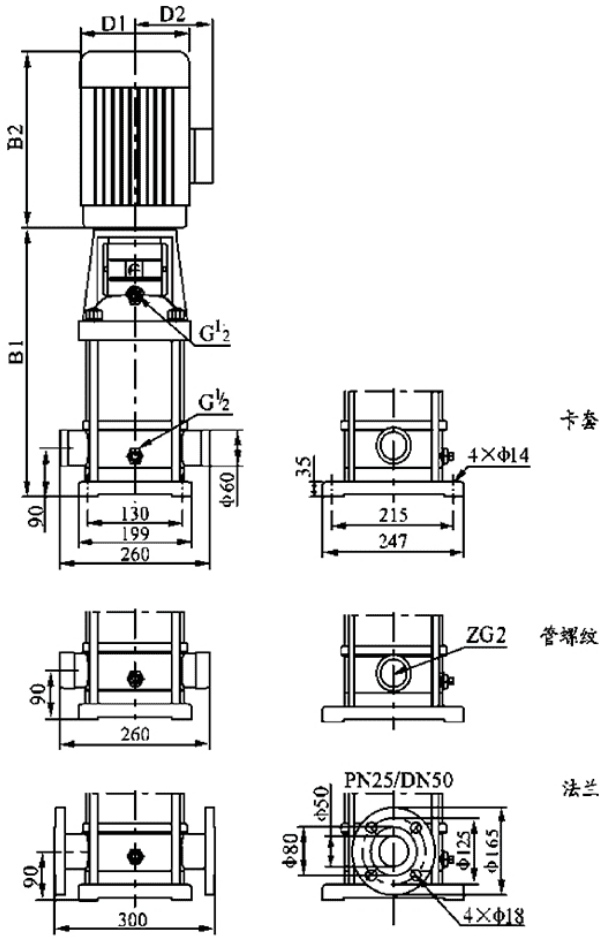

型号Model	尺寸Size (mm)					重量 Weight (kg)
	B1	B2	B1+B2	D1	D2	
CDL12-2	367	290	657	190	155	39
CDL12-3	397	290	687	190	155	43
CDL12-4	437	345	782	197	165	51
CDL12-5	467	345	812	197	165	53
CDL12-6	497	355	852	230	188	61
CDL12-7	547	390	937	260	208	73
CDL12-8	577	390	967	260	208	74
CDL12-9	607	390	997	260	208	76
CDL12-10	637	390	1027	260	208	83
CDL12-12	697	390	1087	260	208	87
CDL12-14	845	500	1345	330	255	157
CDL12-16	905	500	1405	330	255	161
CDL12-18	965	500	1465	330	255	164

流量图Performance curve

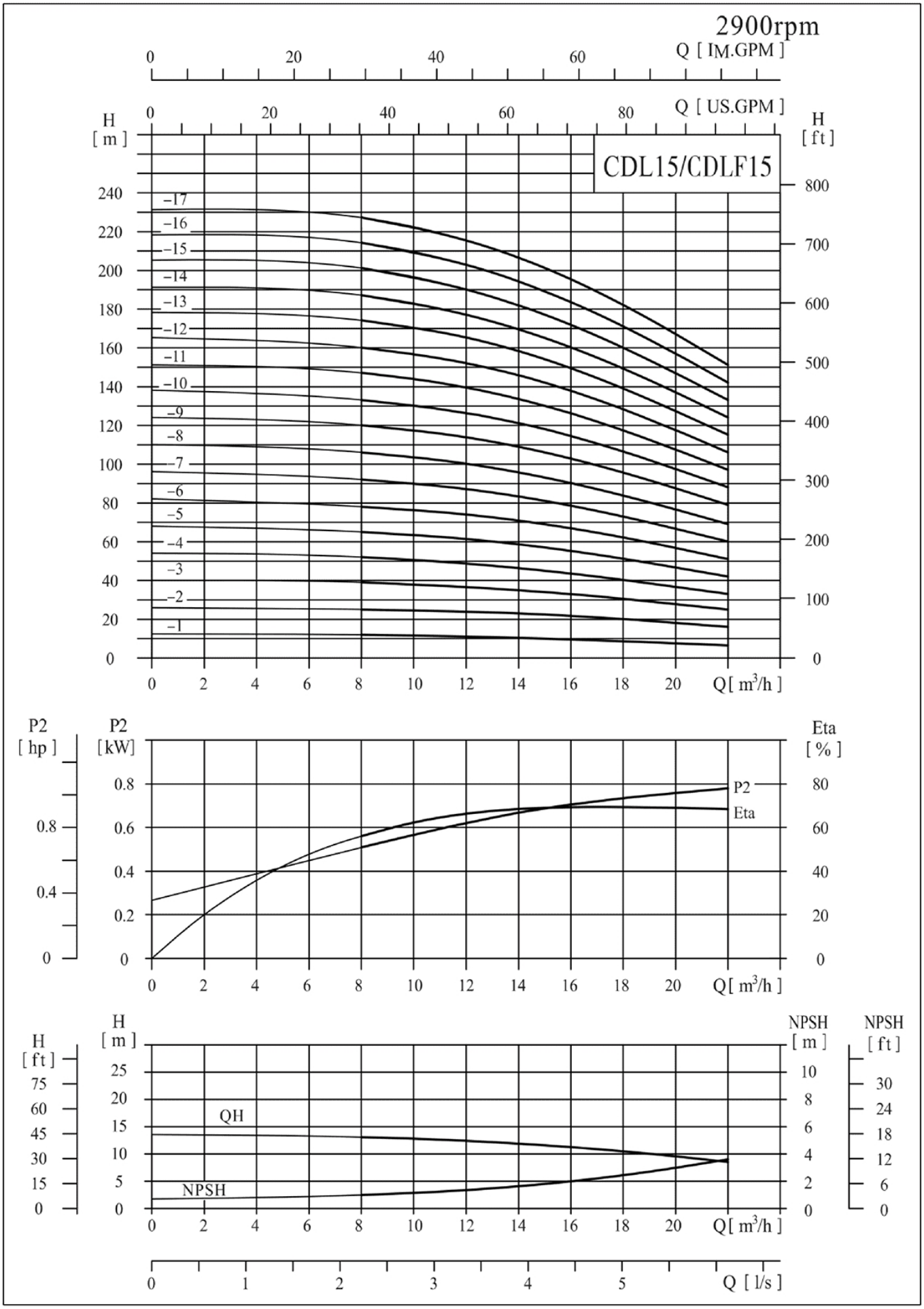

CDL15技术参数Technical Specification

型号Model	配用电机 Driving motor (kW)	Q (m³/h)	8	10	12	14	15	16	18	20	22
CDL15-1	1.1		12	11.5	11	10.5	10	9.5	8.5	7.5	6.5
CDL15-2	2.2		25	24.5	24	23	22.5	21.5	20	18	16
CDL15-3	3		39	38	37	35	34	33	30	28	25
CDL15-4	4		52	51	49	46	45	44	40	37	33
CDL15-5	4		65	63	61	59	57	55	51	47	42
CDL15-6	5.5		78	76	74	71	69	67	62	57	51
CDL15-7	5.5	H (m)	92	90	87	83	81	79	73	67	60
CDL15-8	7.5		106	103	100	96	93	90	84	77	69
CDL15-9	7.5		120	117	114	109	106	103	95	87	79
CDL15-10	11		133	130	126	121	118	114	106	97	88
CDL15-12	11		160	157	152	146	142	138	128	117	106
CDL15-14	11		187	182	177	169	165	160	149	137	124
CDL15-17	15		227	222	215	206	201	195	182	167	151

外形尺寸图 Overall and Dimensions Figure

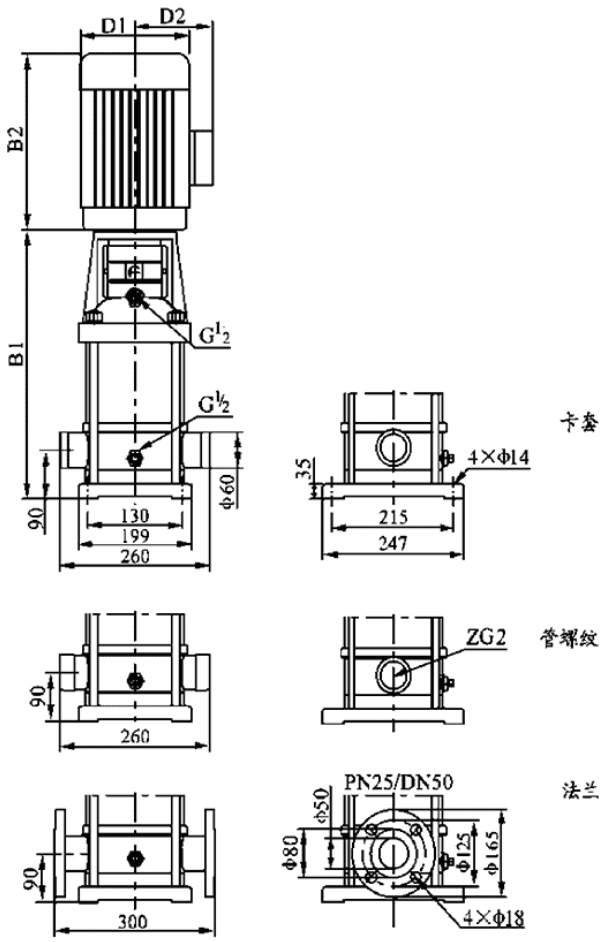

型号Model	尺寸Size (mm)					重量 Weight (kg)
	B1	B2	B1+B2	D1	D2	
CDL15-1	387	245	632	170	142	33
CDL15-2	397	290	687	190	155	42
CDL15-3	452	345	797	197	165	51
CDL15-4	497	355	852	230	188	60
CDL15-5	542	355	897	230	188	62
CDL15-6	607	390	997	260	208	78
CDL15-7	652	390	1042	260	208	80
CDL15-8	697	390	1087	260	208	86
CDL15-9	742	390	1132	260	208	88
CDL15-10	875	500	1375	330	255	157
CDL15-12	965	500	1465	330	255	161
CDL15-14	1055	500	1555	330	255	165
CDL15-17	1190	500	1690	330	255	178

流量图Performance curve

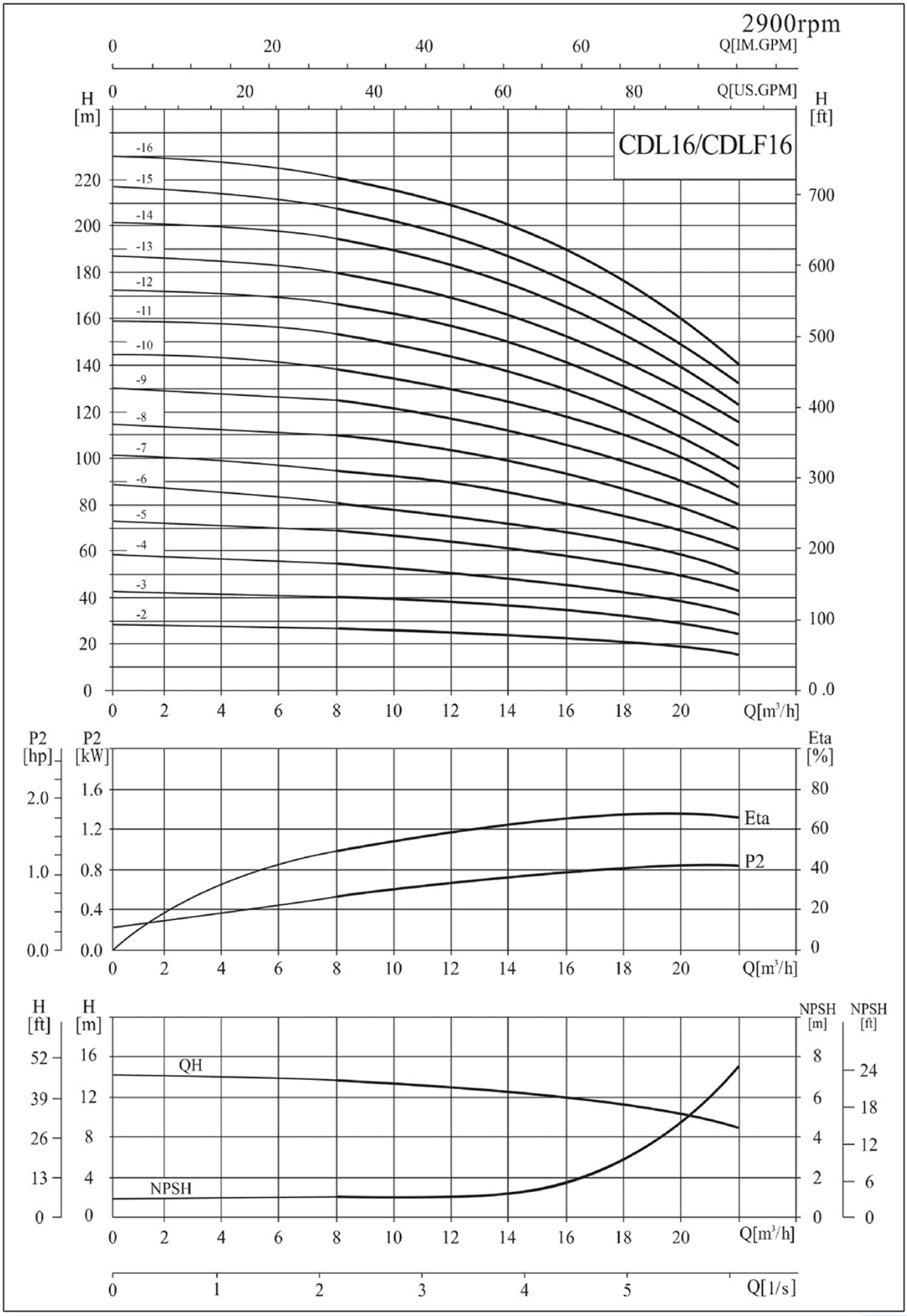

CDL16技术参数Technical Specification

型号Model	配用电机 Driving motor (kW)	Q (m³/h)	8	10	12	14	16	18	20	22
CDL16-2	2.2		27	26	25	*24*	*22*	21	19	16
CDL16-3	3.0		41	40	38	*37*	*34*	*32*	29	*25*
CDL16-4	4.0		54	53	52	49	46	43	38	34
CDL16-5	5,5		68	67	65	62	58	54	48	43
CDL16-6	5.5	H (m)	82	80	78	74	70	64	58	52
CDL16-7	7.5		96	95	91	87	82	76	68	61
CDL16-8	7.5		110	108	104	99	94	86	77	70
CDL16-10	11		138	136	131	125	118	109	97	87
CDL16-12	11		166	162	157	150	141	130	116	105
CDL16-14	15		194	190	184	175	166	152	136	122
CDL16-16	15		222	217	210	200	189	174	156	140

外形尺寸图 Overall and Dimensions Figure

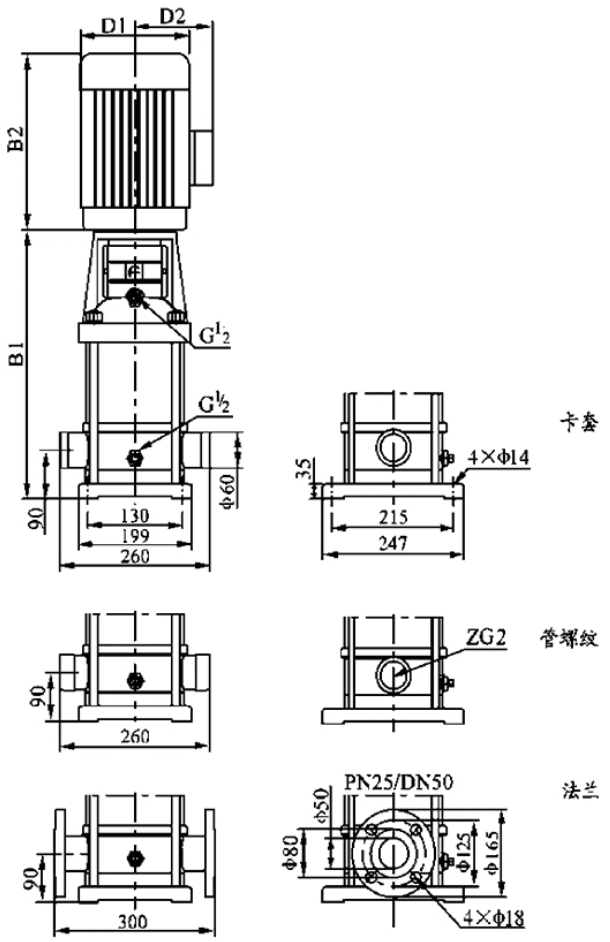

型号Model	尺寸Size (mm)					重量 Weight (kg)
	B1	B2	B1+B2	D1	D2	
CDL16-2	397	290	687	190	155	42
CDL16-3	452	345	797	197	165	50
CDL16-4	497	355	852	230	188	59
CDL16-5	562	390	952	260	208	76
CDL16-6	607	390	997	260	208	77
CDL16-7	652	390	1042	260	208	84
CDL16-8	697	390	1087	260	208	86
CDL16-10	875	500	1375	330	255	158
CDL16-12	965	500	1465	330	255	161
CDL16-14	1055	500	1555	330	255	174
CDL16-16	1145	500	1645	330	255	178

流量图Performance curve

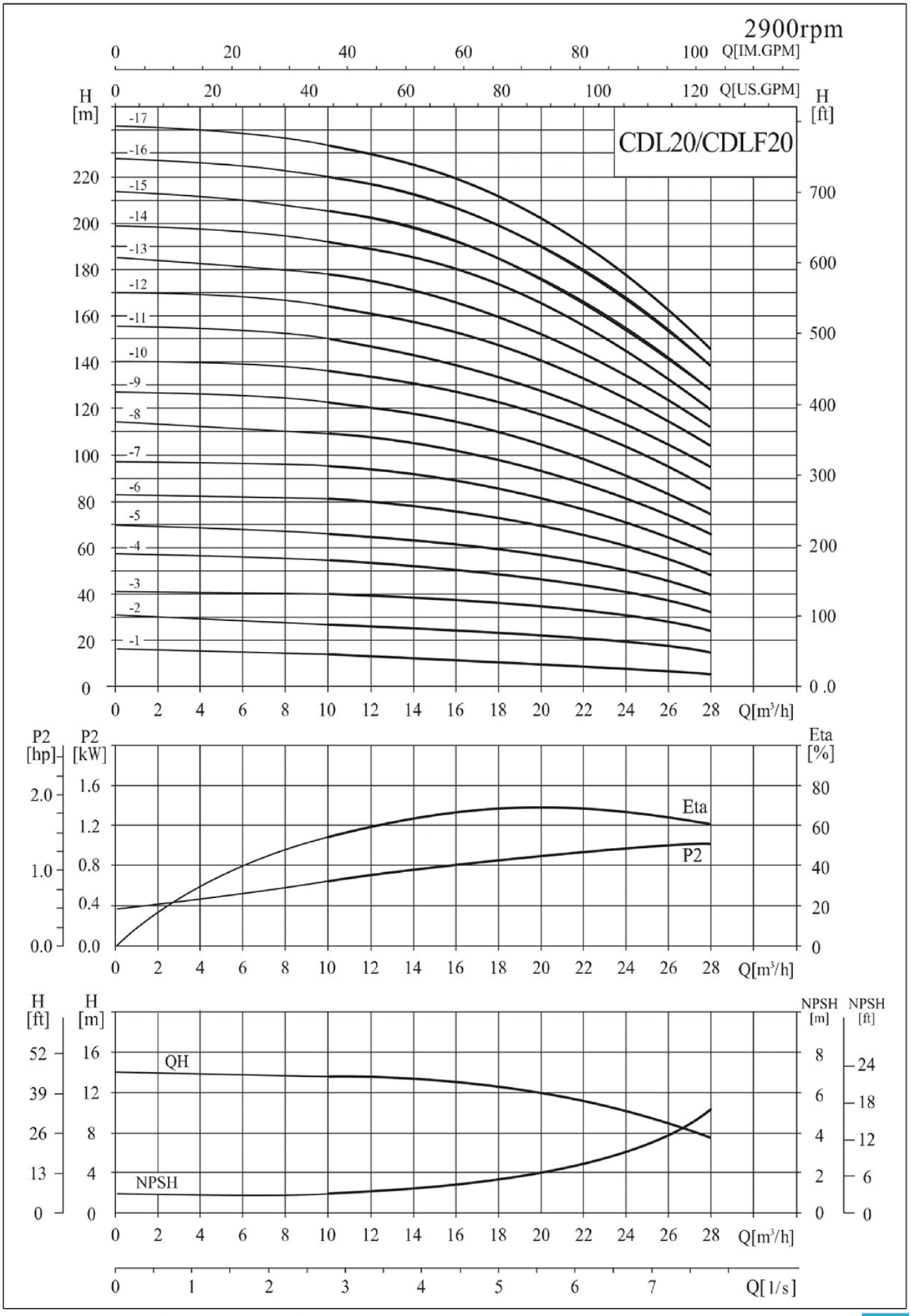

CDL20技术参数Technical Specification

型号Model	配用电机 Driving motor (kW)	Q (m³/h)	10	12	14	16	18	20	22	24	26	28
CDL20-1	1.1		13.5	13	12.5	12	11	10	9	8	7	6
CDL20-2	2.2		27	26.5	26	25	24	23	22	20	18	15
CDL20-3	4.0		40	39.5	39	38	37	35	33	30	27	24
CDL20-4	5.5		54	53	52	51	49	47	44	41	37	33
CDL20-5	5.5		67	66	64	62	60	58	55	50	45	40
CDL20-6	7.5	H (m)	81	79	77	75	73	70	66	61	55	49
CDL20-7	7.5		95	93	91	89	86	82	77	71	65	58
CDL20-8	11		109	107	105	102	99	94	89	82	75	67
CDL20-10	11		136	134	131	128	124	118	111	103	95	85
CDL20-12	15		164	162	158	154	149	142	133	124	114	102
CDL20-14	15		192	189	185	180	174	166	156	145	133	119
CDL20-17	18.5		234	230	225	219	212	202	190	177	162	145

外形尺寸图 Overall and Dimensions Figure

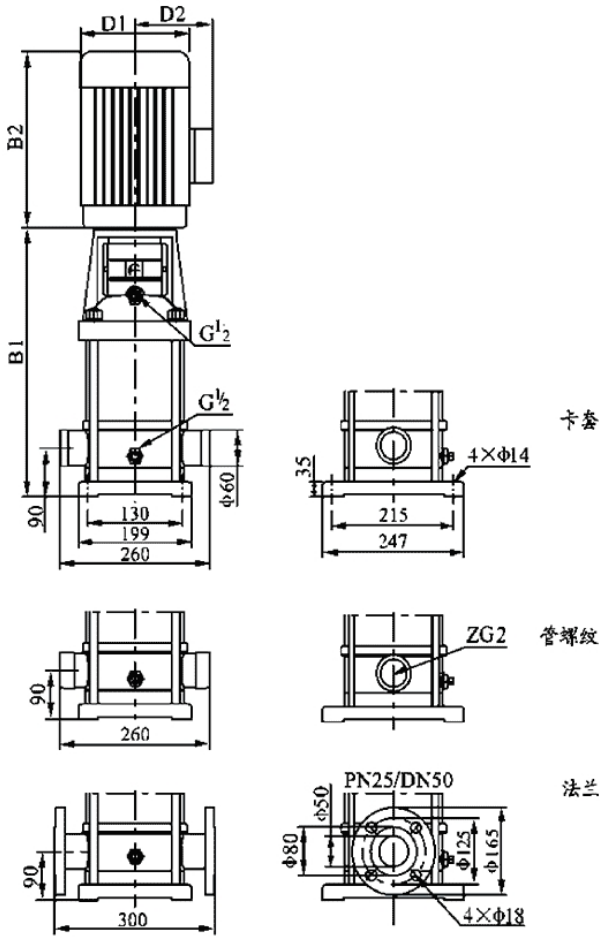

型号Model	尺寸Size (mm)					重量 Weight (kg)
	B1	B2	B1+B2	D1	D2	
CDL20-1	387	245	632	170	142	33
CDL20-2	397	290	687	190	155	42
CDL20-3	452	355	807	230	188	58
CDL20-4	517	390	907	260	208	74
CDL20-5	562	390	952	260	208	76
CDL20-6	607	390	997	260	208	82
CDL20-7	652	390	1042	260	208	84
CDL20-8	785	500	1285	330	255	153
CDL20-10	875	500	1375	330	255	157
CDL20-12	965	500	1465	330	255	170
CDL20-14	1055	500	1555	330	255	172
CDL20-17	1190	550	1740	330	255	195

流量图Performance curve

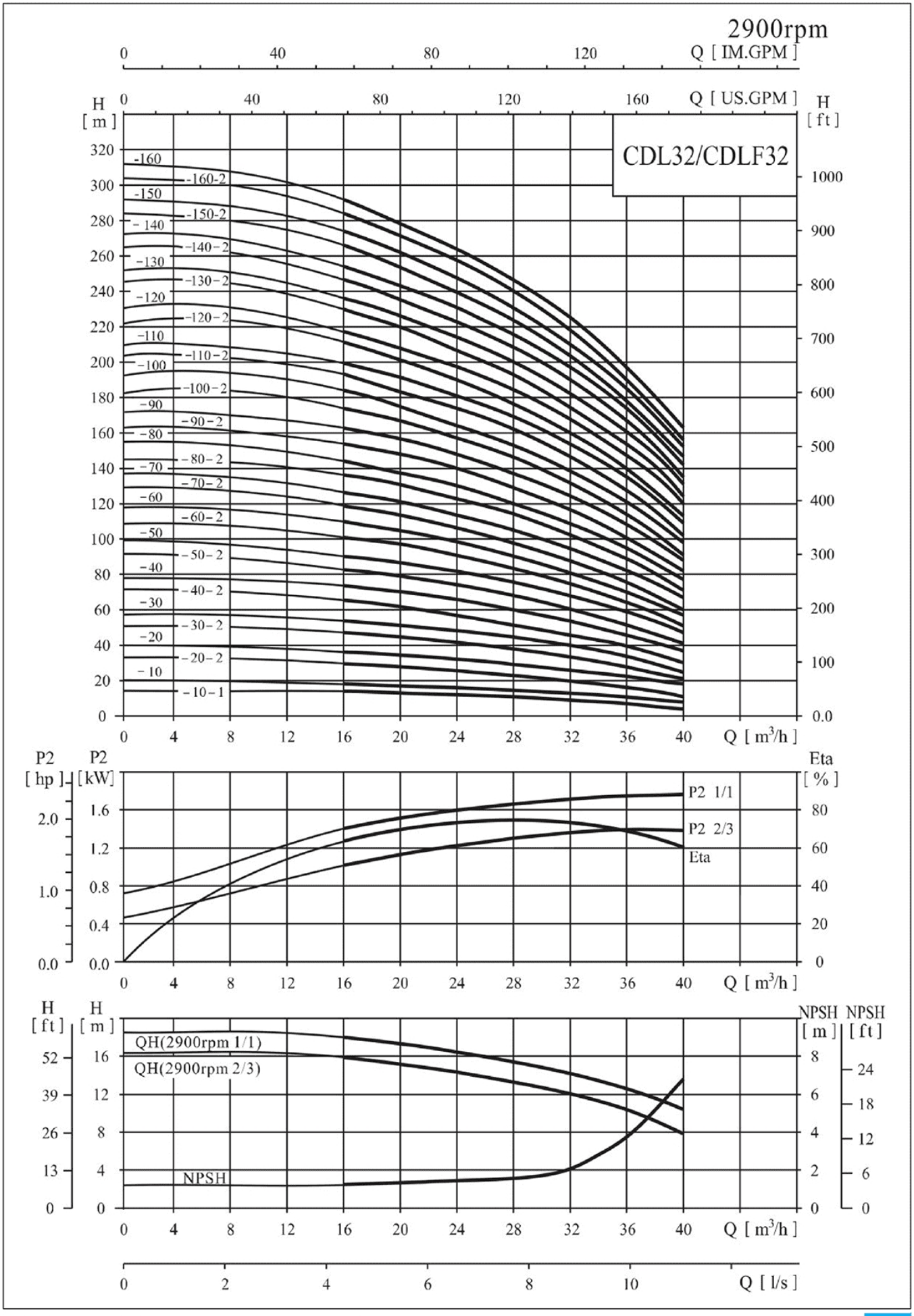

CDL32技术参数Technical Specification

型号Model	电机 Driving motor (kW)	Q (m³/h)	16	20	24	28	32	36	40
CDL32-10-1	1.5	H (m)	14	13	12	11	9	7	4
CDL32-10	2.2		18	17	15	14	13	11	8
CDL32-20-2	3.0		29	28	*26*	*23*	20	16	11
CDL32-20	4.0		36	34	32	29	27	23	18
CDL32-30-2	5.5		47	44	41	38	33	28	*21*
CDL32-30	5.5		54	51	48	*44*	40	35	27
CDL32-32	7.5		65	*62*	58	*53*	46	40	30
CDL32-40	7.5		72	69	65	*59*	53	47	37
CDL32-50-2	11		83	*79*	74	68	60	52	41
CDL32-50	11		90	86	81	74	67	59	47
CDL32-60-2	11		101	97	90	83	74	65	51
CDL32-60	11		108	104	97	90	81	72	57
CDL32-70-2	15		119	114	107	98	88	78	60
CDL32-70	15		126	121	113	105	95	85	*67*
CDL32-80-2	15		136	131	123	114	102	90	*71*
CDL32-80	15		144	138	130	120	109	97	77

型号	电机 Driving motor (kW)	Q (m³/h)	16	20	24	28	32	36	40
CDI32-90-2	18.5	H (m)	154	148	140	129	117	102	82
CDL32-90	18.5		162	156	147	136	124	109	88
CDL32-100-2	18.5		175	166	157	146	131	115	91
CDL32-100	18.5		182	173	164	152	138	122	98
CDI32-110-2	22		193	184	173	164	146	128	102
CDL32-110	22		200	191	180	168	153	135	109
CDL32-120-2	22		211	201	189	178	160	140	113
CDL32-120	22		218	208	196	184	167	147	120
CDL32-130-2	30		230	218	206	193	174	153	124
CDL32-130	30		237	225	213	200	181	160	131
CDL32-140-2	30		247	235	222	210	189	165	135
CDL32-140	30		255	242	229	216	196	172	142
CDL32-150-2	30		266	253	239	224	203	178	145
CDL32-150	30		274	260	246	231	210	185	152
CDL32-160-2	30		284	270	255	240	218	190	156
CDL32-160	30		292	277	262	246	225	197	163

外形尺寸图 Overall and Dimensions Figure

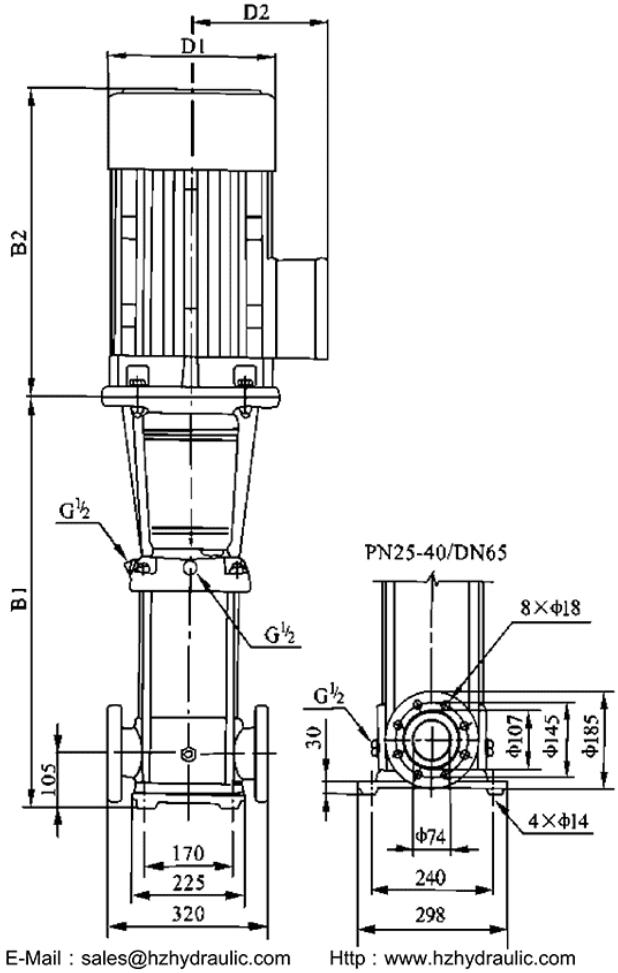

型号Model	尺寸Size (mm)					重量 Weight (kg)
	B1	B2	B1+B2	D1	D2	
CDL32-10-1/CDL32-10	505	290	795	190	155	64/68
CDL32^020)L32-20	575	345/355	920/930	197/230	165/180	77/85
dX32-3O2CTL32-30	645	390	1035	260	208	100
mi32-40-2O)L32-40	715	390	1105	260	208	109
0X32-5020)1-32-50	890	500	1390	330	255	181
(DL32-60-2O)L32-60	960	500	1460	330	255	185
CDL32-7(K2a)L32-70	1030	500	1530	330	255	199
CDL32-8020)L32-80	1100	500	1600	330	255	203
GDL32-90-2CTL32-90	1170	550	1720	330	255	222
0)132-10020X32-100	1240	550	1790	330	255	227
CDI32-lia2CT32-110	1310	575	1885	360	285	272
CDL32-120-2CDL32-120	1380	575	1955	360	285	276
CDL32-13O2OT32-130	1450	650	2100	400	310	337
CDL32^140-2O)I32-140	1520	650	2170	400	310	341
CDL32-15020X32-150	1590	650	2240	400	310	345
OL32-160-2/CDL32-160	1660	650	2310	400	310	350

流量图Performance curve

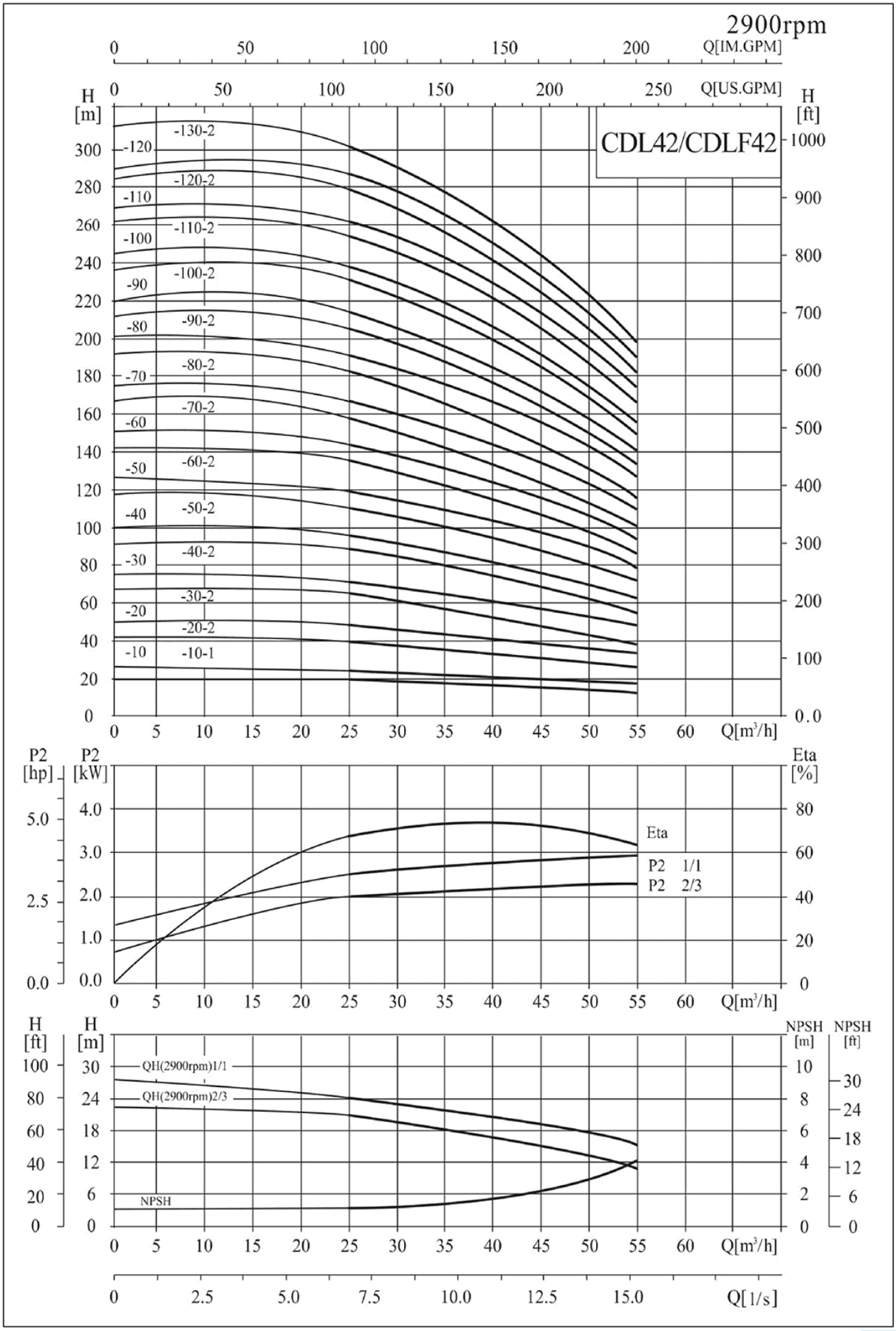

CDL42技术参数Technical Specification

型号Model	配用电机 Driving motor (kw)	Q (m3/h)	25	30	35	40	42	45	50	55
CDL42-10-1	3.0		20	19	18	17	16	15	13	11
CDL42-10	4.0		24	23	22	21	20	19	18	16
CDL42-20-2	5.5		40	38	36	33	32	30	27	23
CDL42-20	7.5		48	46	44	42	41	39	35	31
CDL42-30-2	11		63	61	58	54	52	50	44	38
CDL42-30	11		71	69	66	63	61	58	53	47
CDL42-40-2	15		87	84	80	75	73	69	62	54
CDL42-40	15		95	92	88	84	81	78	71	62
CDL42-50-2	18.5		111	107	102	96	93	88	80	69
CDL42-50	18.5		119	115	110	105	101	97	88	78
CDL42-60-2	22		135	130	124	117	113	108	97	85
CDL42-60	22	H	143	138	132	125	122	116	106	93
CDL42-70-2	30	(m)	158	152	146	138	134	127	115	100
CDL42-70	30		166	161	154	146	142	135	124	109
CDL42-80-2	30		182	175	168	159	154	146	133	116
CDL42-80	30		190	184	176	167	162	154	141	124
CDL42-90-2	30		205	198	190	180	174	166	150	132
CDL42-90	37		214	207	198	188	183	174	159	140
CDL42-100-2	37		230	221	212	200	194	185	168	147
CDL42-100	37		238	230	220	209	203	193	177	155
CDL42-110-2	45		255	245	236	223	217	206	188	165
CDL42-110	45		263	255	244	232	225	214	196	173
CDL42-120-2	45		280	270	259	245	238	226	206	181
CDL42-120	45		289	280	268	255	247	236	216	190
CDL42-130-2	45		305	294	282	267	259	247	225	198

外形尺寸图 Overall and Dimensions Figure

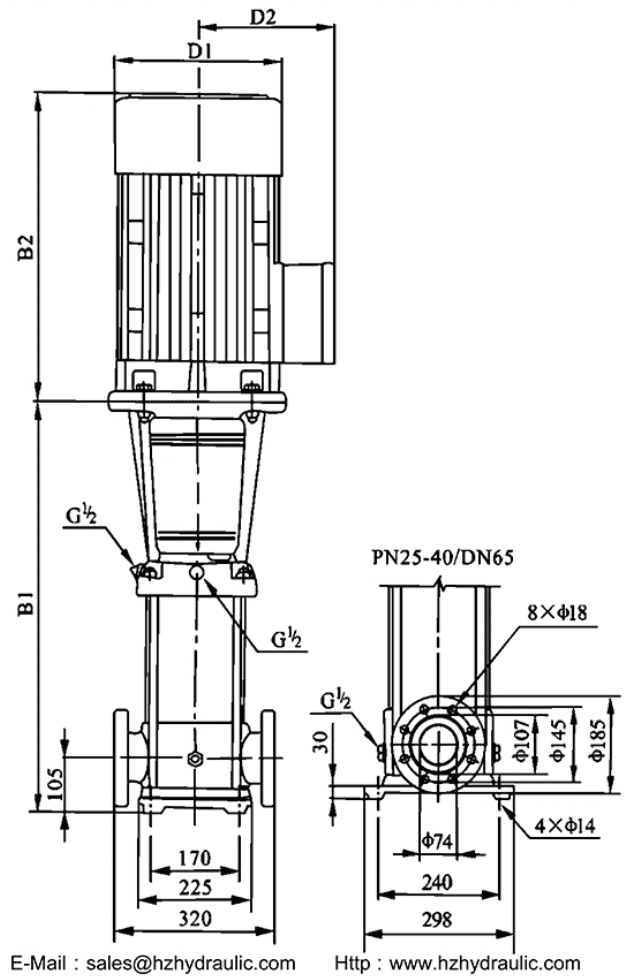

型号Model	尺寸Size (mm)					重量 Weight (kg)
	Bl	B2	B1+B2	Dl	D2	
CDL42-10-1 CDL42-10	561	345/355	906/916	197/230	165/188	83/90
CDL42-20-2 CDL42-20	641	390	1031	260	208	105/110
CDL42-30-2 CDL42-30	826	500	1326	330	255	183
CDL42-40-2 CDU2-40	906	500	1406	330	255	197
CDL42-50-2 CDL42-50	986	550	1536	330	255	221
CDL42-60-2 CDL42-60	1066	575	1641	360	285	261
CDL42-70-2 CDU2-70	1146	650	1796	400	310	320
CDU2-80-2 CDL42-80	1226	650	1876	400	310	324
CDL42-90-2 CDL42-90	1306	650	1956	400	310	328/352
CDL42-100-2 CDL42-100	1386	650	2036	400	310	355
CDL42-110-2 CDL42-110	1466	685	2151	450	345	426
CDL42-120-2 CDU2-120	1546	685	2231	450	345	432
CDU2-130-2	1626	685	2311	450	345	438

流量图Performance curve

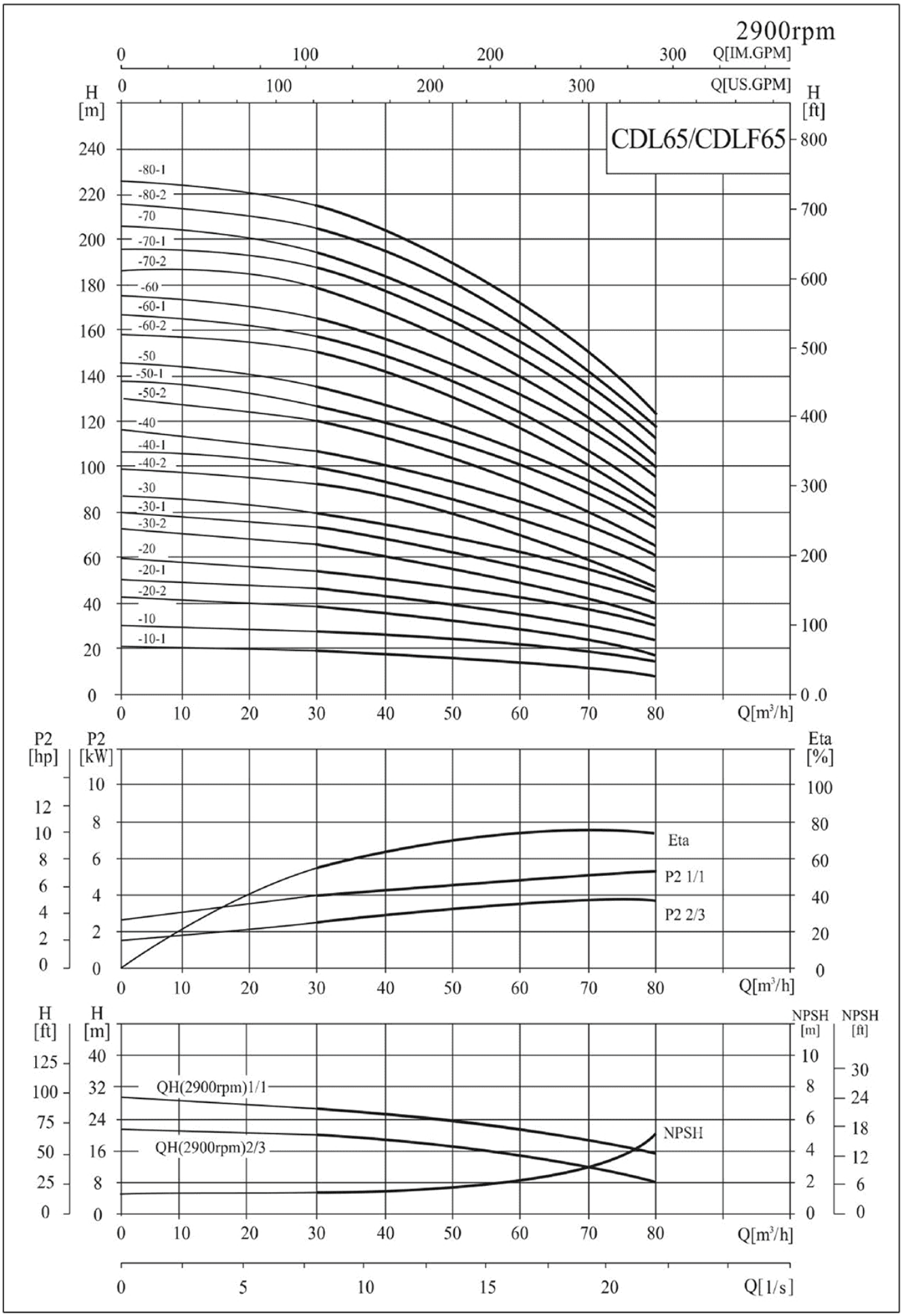

CDL65技术参数Technical Specification

型号Model	配用电机Driving motor (kW)	Q (m3/h)	30	40	50	60	65	70	80
CDL65-10-1	4.0		19	18	16	14	13	11	8
CDL65-10	5.5		27	25	23	21	20	18	15
CDL65-20-2	7.5		39	36	33	29	26	23	17
CDL65-20-1	11		46	44	40	36	33	30	*24*
CDL65-20	11		53	51	47	43	40	37	30
CDL65-30-2	15		*66*	62	56	50	46	41	32
CDL65-30-1	15		73	69	63	57	53	48	39
CDL65-30	18.5		80	76	70	64	60	55	*46*
CDL65-40-2	18.5		92	87	80	71	66	60	47
CDL65-40-1	22		100	94	87	78	*73*	*67*	54
CDL65-40	22	H	107	101	94	85	80	74	61
CDL65-50-2	30	(m)	121	114	105	95	88	80	64
CDL65-50-1	30		128	121	112	102	95	87	71
CDL65-50	30		136	129	119	109	102	*94*	78
CDL65-60-2	30		150	142	131	118	110	101	81
CDL65-60-1	37		157	149	138	125	117	108	88
CDL65-60	37		164	156	145	132	124	115	95
CDL65-70-2	37		179	169	156	141	132	121	99
CDL65-70-1	37		186	176	163	148	139	128	106
CDL65-70	45		193	183	170	155	146	135	112
CDL65-80-2	45		207	196	182	164	154	142	116
CDL65-80-1	45		215	203	189	171	161	149	123

外形尺寸图 Overall and Dimensions Figure

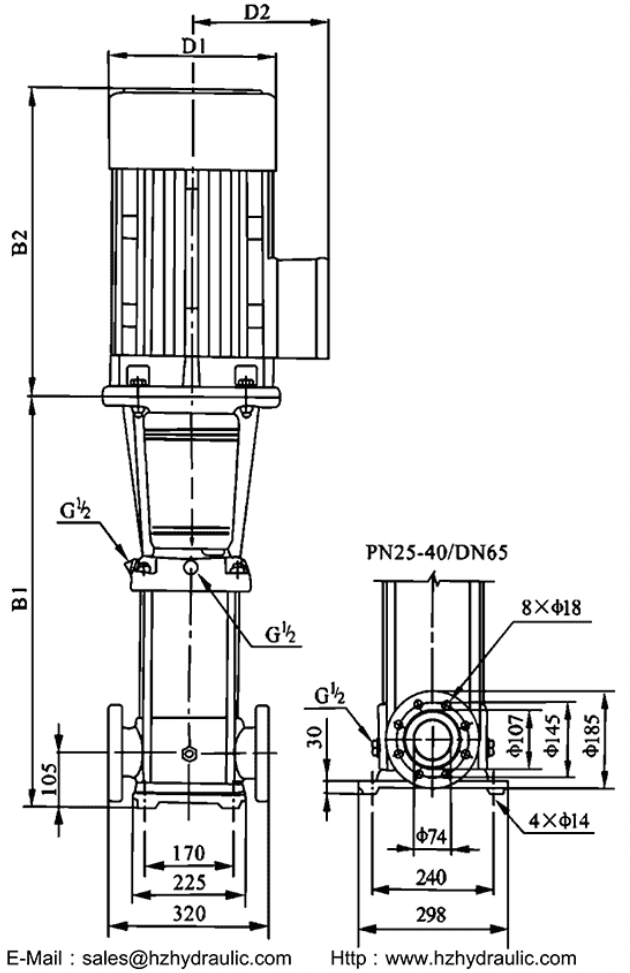

型号Model	尺寸Size (mm)					重量 Weight (kg)
	B1	B2	B1+B2	D1	D2	
CDL65-10-1	561	355	916	230	188	93
CDL65-10	561	390	951	260	208	105
CDL65-20-2	644	390	1034	260	208	110
CDL65-20-1	754	500	1254	330	255	182
CDL65-20	754	500	1254	330	255	182
CDL65-30-2	836	500	1336	330	255	196
CDL65-30-1	836	500	1336	330	255	197
CDL65-30	836	550	1386	330	255	221
CDL65-40-2	919	550	1469	330	255	225
CDL65-40-1	919	575	1494	360	285	258
CDL65-40	919	575	1494	360	285	258
CDL65-50-2	1001	650	1651	400	310	319
CDL65-50-1	1001	650	1651	400	310	319
CDL65-50	1001	650	1651	400	310	320
CDL65-60-2	1084	650	1734	400	310	325
CDL65-60-1	1084	650	1734	400	310	349
CDL65-60	1084	650	1734	400	310	349
CDL65-70-2	1166	650	1816	400	310	353
CDL65-70-1	1166	650	1816	400	310	353
CDL65-70	1166	685	1851	460	340	420
CDL65-80-2	1248	685	1933	460	340	424
CDL65-80-1	1248	685	1933	460	340	424

流量图Performance curve

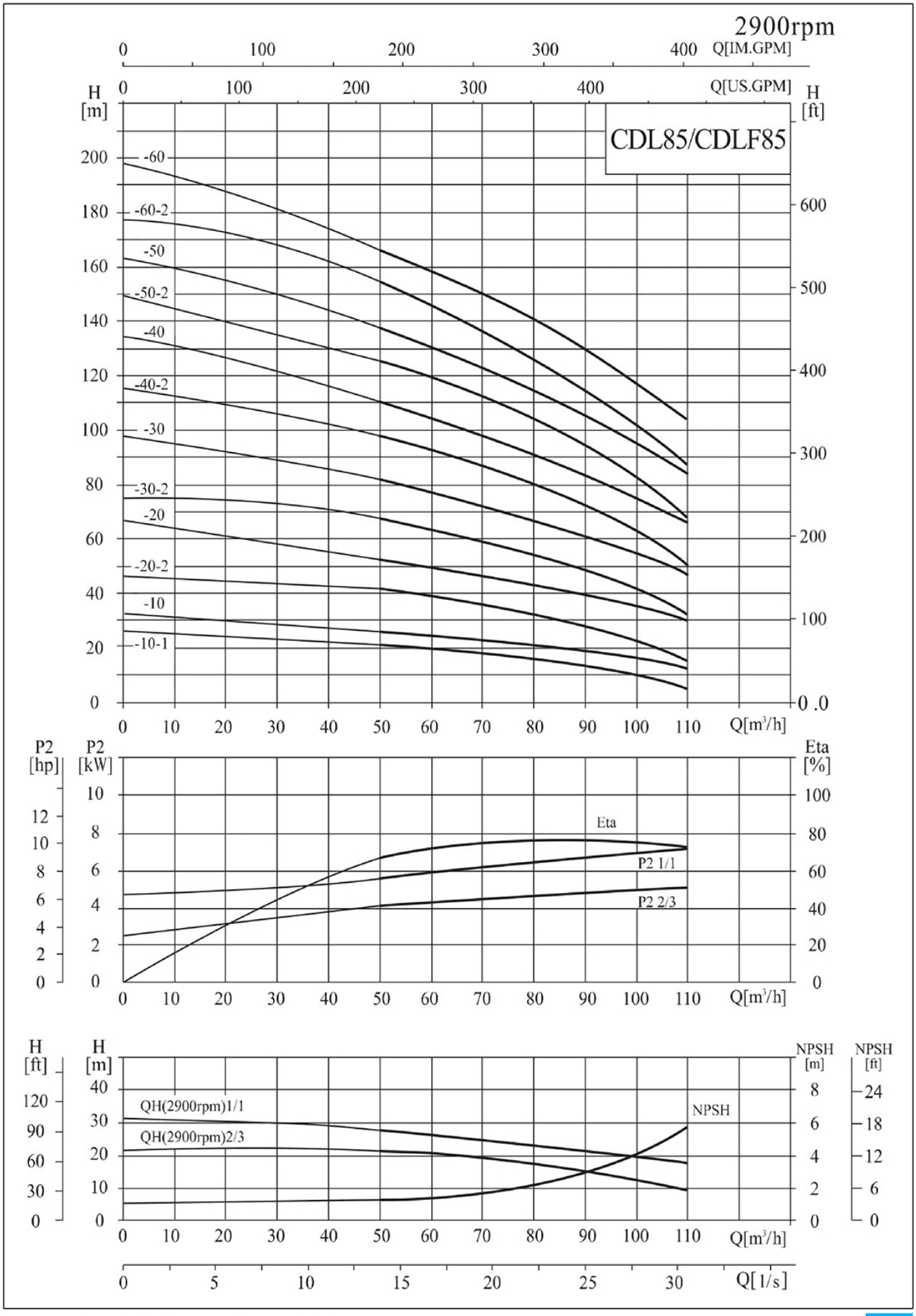

CDL85技术参数Technical Specification

型号Model	配用电机 Driving motor (kW)	Q (m³/^	50	60	70	80	85	90	100	110
CDL85-10-1	5.5		22	19	17	16	14	13	10	6
CDL85-10	7.5		25	24	22	21	20	19	16	12
CDL85-20-2	11		41	39	36	32	30	28	22	15
CDL85-20	15		53	50	47	44	41	40	36	30
CDL85-30-2	18.5	H	68	65	60	55	52	49	41	32
CDL85-30	22	(m)	81	77	72	67	64	62	55	48
CDL85-40-2	30		98	93	87	80	75	72	62	50
CDL85-40	30		110	105	100	92	86	84	76	66
CDL85-50-2	37		126	120	113	104	98	93	81	68
CDL85-50	37		139	131	124	115	110	106	94	83
CDL85-60-2	45		155	148	139	129	122	117	102	86
CDL85-60	45		168	160	150	141	134	130	117	103

外形尺寸图 Overall and Dimensions Figure

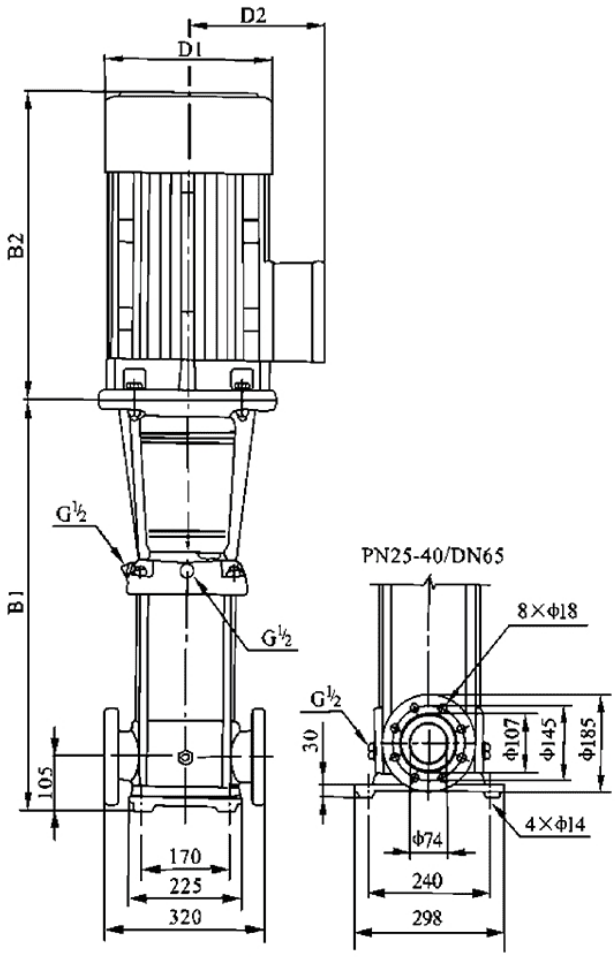

型号Model	尺寸Size (mm)					重量 Weight (kg)
	B1	B2	B1+B2	D1	D2	
CDL85-10-1	571	390	961	260	208	105
CDL85-10	571	390	961	260	208	110
CDL85-20-2	773	500	1273	330	255	181
CDL85-20	773	500	1273	330	255	192
CDL85-30-2	865	550	1415	330	255	215
CDL85-30	865	575	1440	360	285	252
CDL85-40-2	957	650	1607	400	310	312
CDL85-40	957	650	1607	400	310	312
CDL85-50-2	1049	650	1699	400	310	336
CDL85-50	1049	650	1699	400	310	336
CDL85-60-2	1141	685	1826	460	340	407
CDL85-60	1141	685	1826	460	340	407

流量图Performance curve

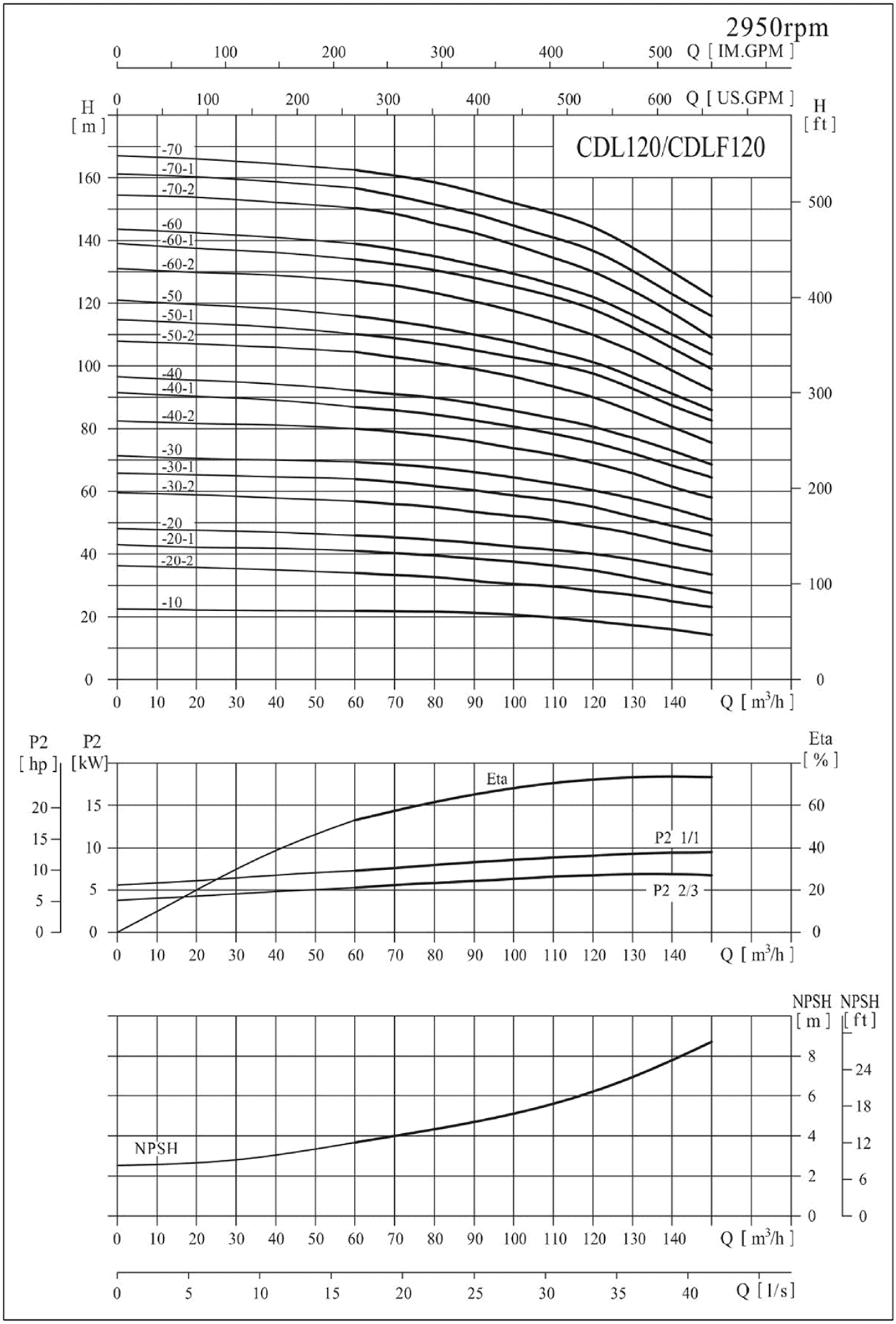

CDL120技术参数Technical Specification

型号Model	配用电机 Driving motor (kW)	Q	60	70	80	90	100	110	120	130	140	150
CDL120-10	11		22	21.8	21.6	21	20.5	19.5	18.5	17	16	15
CDL120-20-2	15		34	33.6	33	31	30.2	30	28.5	27	25	24
CDL120-20-1	18.5		41	40	39.5	38.5	37	36.5	34.5	32.5	30	27.5
CDL120-20	22		46	45	44.5	43.5	42.4	41	40	38	36	33.5
CDL120-30-2	30		57	56	55	53.5	52	51	49	46.5	43.5	41
CDL120-30-1	30		64	63	62	60	58.5	57.5	55.5	52	49	46
CDL120-30	30		69.5	68.5	67.5	66	64.4	62.5	61	57.5	54.5	51
CDL120-40-2	37	H (m)	80.5	79	78	76	73.5	72	69	66	61.5	58
CDL120-40-1	37		87	86	84.5	82	80	78	76	72	68	64.5
CDL120-40	45		92.5	91	90	88	85.5	83	81	77	73	68.5
CDL120-50-2	45		104.5	103	101	99	96	93	90	85.5	80.5	75.5
CDL120-50-1	45		110.5	109	107.5	105	102	100	97	92	86.5	83
CDL120-50	55		115.5	114	113	110	107.5	104.5	101.5	96	91	86
CDL120-60-2	55		128	125.5	123	121	117.3	113.5	110	104.5	98.5	92.5
CDL120-60-1	55		134	132	130.5	127	124	121	118	111	105	100
CDL120-60	75		139	137	135	132	128.8	126	123	116	110	104
CDL120-70-2	75		151	148	145.5	143	138.6	134	130	123.5	116.5	109
CDL120-70-1	75		156.5	154	152	148.5	144.5	141	137.5	130	123	116.5
CDL120-70	75		162.5	160.5	158.5	155	151	148	145	137	129	123

外形尺寸图 Overall and Dimensions Figure

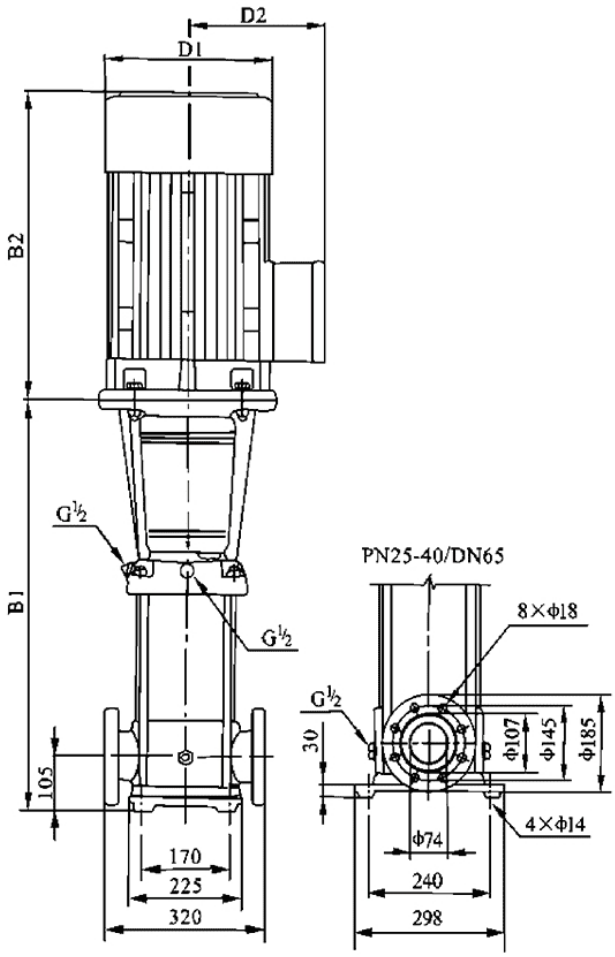

型号Model	尺寸Size (mm)					重量 Weight (kg)
	B1	B2	B1+B2	D1	D2	
CDL120-10	840	500	1340	330	255	230
CDL120-20-2	1000	500	1500	330	255	245
CDL120-20-1	1000	550	1550	330	255	250
CDL120-20	1000	575	1575	360	285	285
CDL120-30-2	1160	650	1810	400	310	360
CDL120-30-1	1160	650	1810	400	310	360
CDL120-30	1160	650	1810	400	310	360
CDL120-40-2	1320	650	1970	400	310	400
CDL120-40-1	1320	650	1970	400	310	400
CDL120-40	1320	685	2005	460	340	460
CDL120-50-2	1480	685	2165	460	340	470
CDL120-50-1	1480	685	2165	460	340	470
CDL120-50	1510	760	2270	540	370	575
CDL120-60-2	1670	760	2430	540	370	585
CDL120-60-1	1670	760	2430	540	370	585
CDL120-60	1670	845	2515	580	410	705
CDL120-70-2	1830	845	2675	580	410	715
CDL120-70-1	1830	845	2675	580	410	715
CDL120-70	1830	845	2675	580	410	715

流量图Performance curve

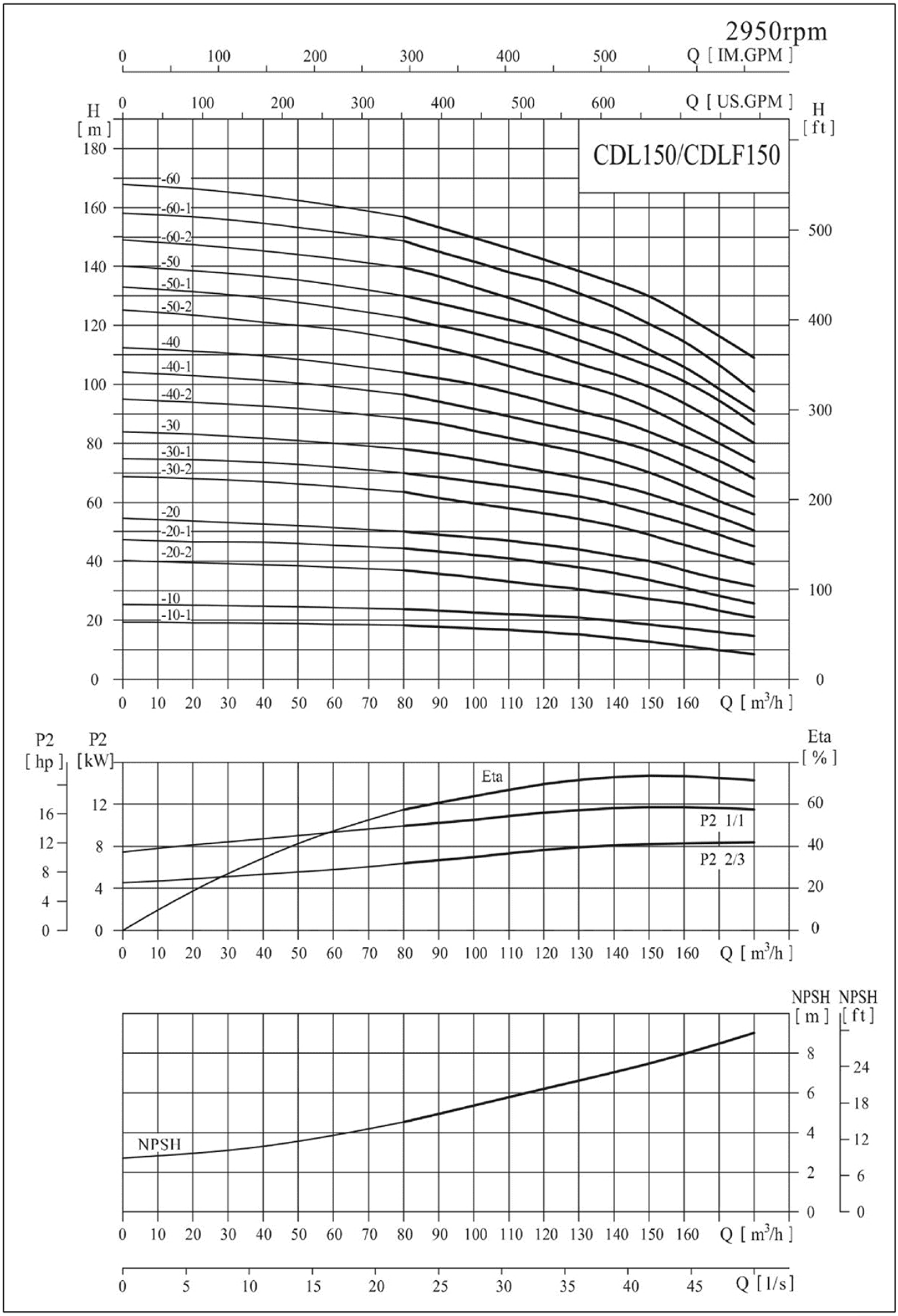

CDL150技术参数Technical Specification

型号Model	电机 Driving motor (kW)	Q (m³/h)	80	90	100	110	120	130	140	150	160	170	180
CDL150-10-1	11		18.3	17.8	17.3	17	16	15	14	12.5	11	10	8.5
CDL150-10	15		24	23	22.5	22	21.5	20.5	20	18.5	17	16	15
CDL150-20-2	18.5		37	35.5	34	33	32	31	29	27.5	26	23	21
CDL150-20-1	22		44.3	43	42	40	39	38.5	37.5	35	33	30	27
CDL150-20	30		50	49	48	47	45.5	44	42	40	37	34	32
CDL150-30-2	30		63.5	61	59	57.5	56	54.5	53	49	45.5	42	39
CDL150-30-1	37		70	68	67	65	63	62	60	56	53	49	45
CDL150-30	37	H (m)	78	76.5	75	73	70.5	68	66	63	59	55	50.5
CDL15(M0-2	45		89	87	84	81.5	79	77	74.5	70.5	65.5	60	56
CDL1504M	45		96.5	94	91.5	89	86.5	84	81.5	77	72.5	67	62
CDL150-40	55		104	102	100	97	95	91	88	84	79.5	74	68
CDL150-50-2	55		115.5	112	109	106	102.5	100	97	92	86	79	73.5
CDL150-50-1	75		122.5	119.5	117	113.5	111.5	107.5	104.5	99	93.5	87	80
CDL150-50	75		130	127.5	125	121	119	115	111.5	106.5	101	94.5	86.5
CDL150-60-2	75		140	137	133	130	126	121	118	112	106	98	91
CDL150-60-1	75		148.5	145	141.7	137.5	135	131	127	120.5	114.5	106.5	97.5
CDL150-60	75		157	153	149	145	142	139.5	137	130	123.5	116	109

外形尺寸图 Overall and Dimensions Figure

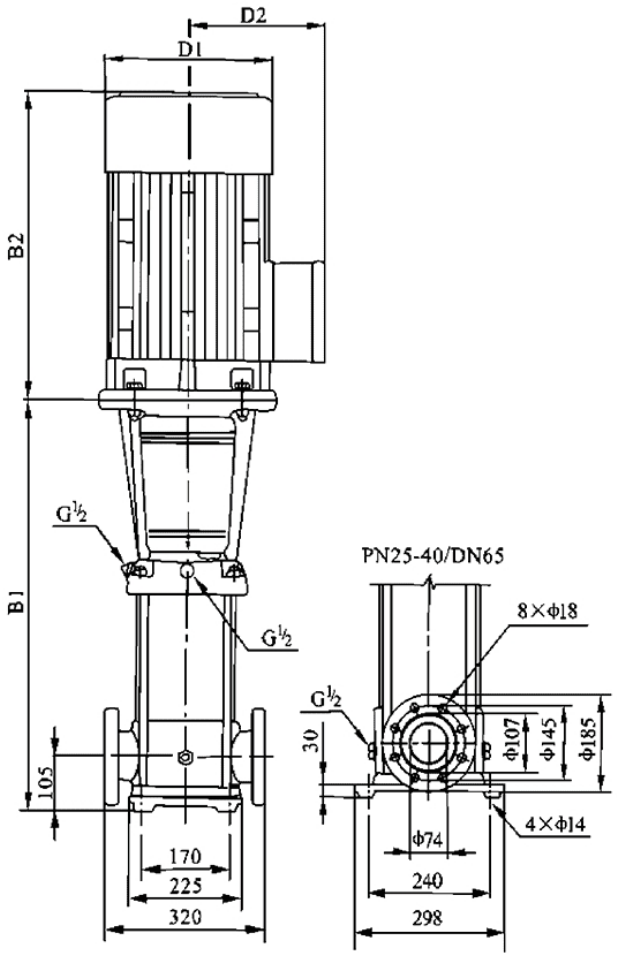

型号Model	尺寸Size (mm)					重量 Weight (kg)
	B1	B2	B1+B2	D1	D2	
CDL150-10-1	840	500	1340	330	255	230
CDL150-10	840	500	1340	330	255	235
CDL150-20-2	1000	550	1550	330	255	250
CDL150-20-1	1000	575	1575	360	285	295
CDL150-20	1000	650	1650	400	310	350
CDL150-30-2	1160	650	1810	400	310	360
CDL150-30-1	1160	650	1810	400	310	360
CDL150-30	1160	650	1810	400	310	385
CDL150-40-2	1320	685	2005	460	340	460
CDL150-40-1	1320	685	2005	460	340	460
CDL150-40	1350	760	2110	540	370	560
CDL150-50-2	1510	760	2270	540	370	570
CDL150-50-1	1510	845	2355	580	410	690
CDL150-50	1510	845	2355	580	410	690
CDL150-60-2	1670	845	2515	580	410	700
CDL150-60-1	1670	845	2515	580	410	700
CDL150-60	1670	845	2515	580	410	700

流量图Performance curve

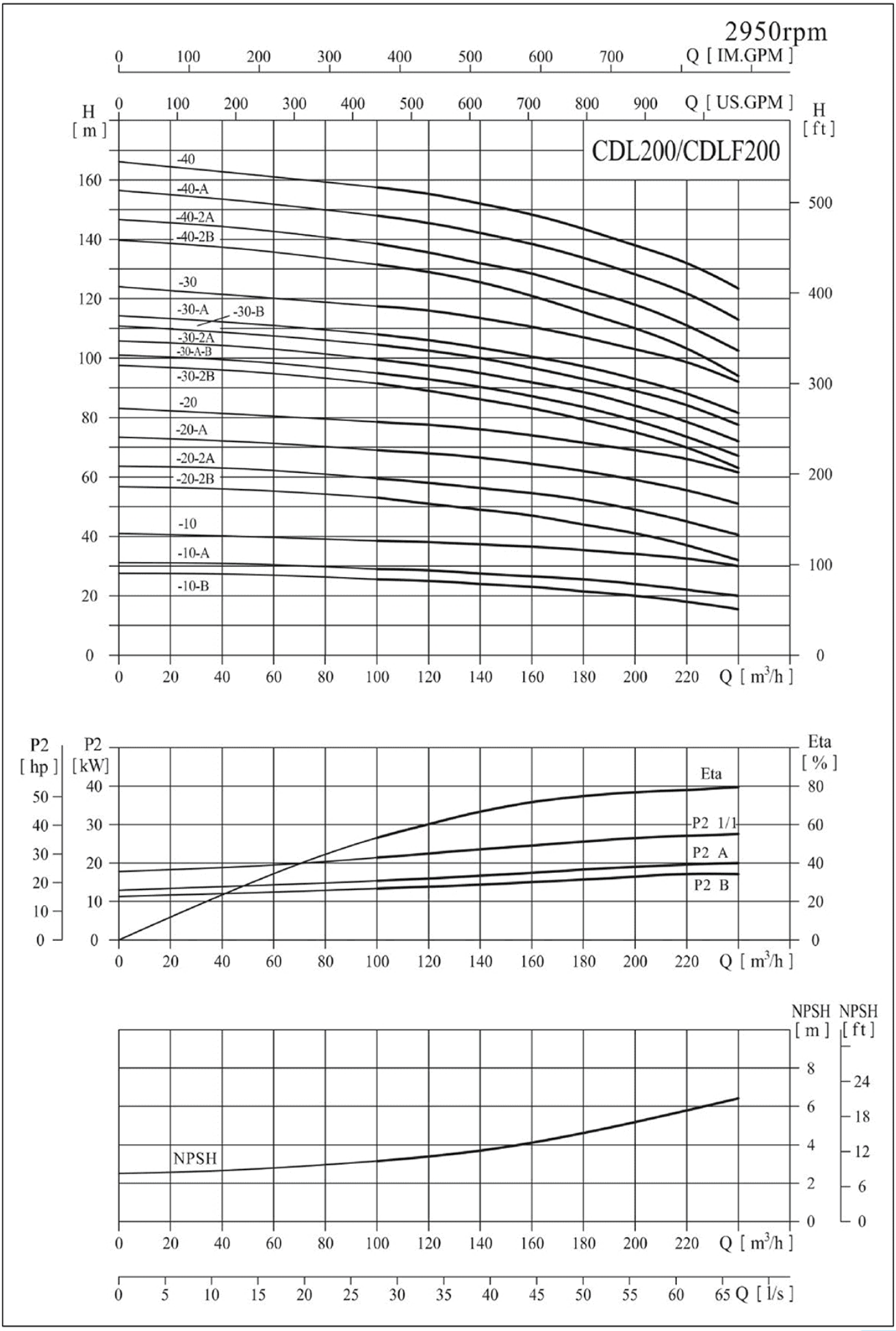

CDL200技术参数Technical Specification

型号Model	配用电机 Driving motor (kW)	Q (m³/^	100	120	140	160	180	200	220	240
CDL200-10-B	18.5		25.5	25	24	23	21.5	20	18	15.5
CDL200-10-A	22		29	28.5	27.5	26.5	25.5	24	22	20
CDL200-10	30		38.5	38	37.5	36.5	35	34	32.5	30
CDL200-20-2B	37		53	51	49	47	44	41	37	32
CDL200-20-2A	45		59.5	58	56	54	52.5	49	44.5	40.5
CDL200-20-A	55		69	68	66	64	62	59	55.5	51
CDL200-20	55		78.5	77.5	76	74	71.5	69	66	61.5
CDL200-30-2B	75		91.5	89	86.5	83.5	79	75	70	63
CDL200-30-A-B	75	H (m)	95	93	90	87	83.5	79	73.5	67
CDL200-30-2A	75		99.5	97.5	94.5	91.5	89	84	78.5	72
CDL200-30-B	75		104.5	102.5	100	97	93	89	84.5	77.5
CDL200-30-A	75		108	106	103.5	100.5	97.5	93	88	81.5
CDL200-30	90		117.5	116	113.5	110.5	107	103	99	92
CDL200-40-2B	90		131.5	129	125.5	121	115.5	110	103.5	94
CDL200-40-2A	110		138.5	136	132	128	124	118	111	102.5
CDL200-40-A	110		148	145.5	142.5	138	134	128	122	113
CDL200-40	110		157.5	155.5	152.5	148	143.5	138	132.5	123.5

外形尺寸图 Overall and Dimensions Figure

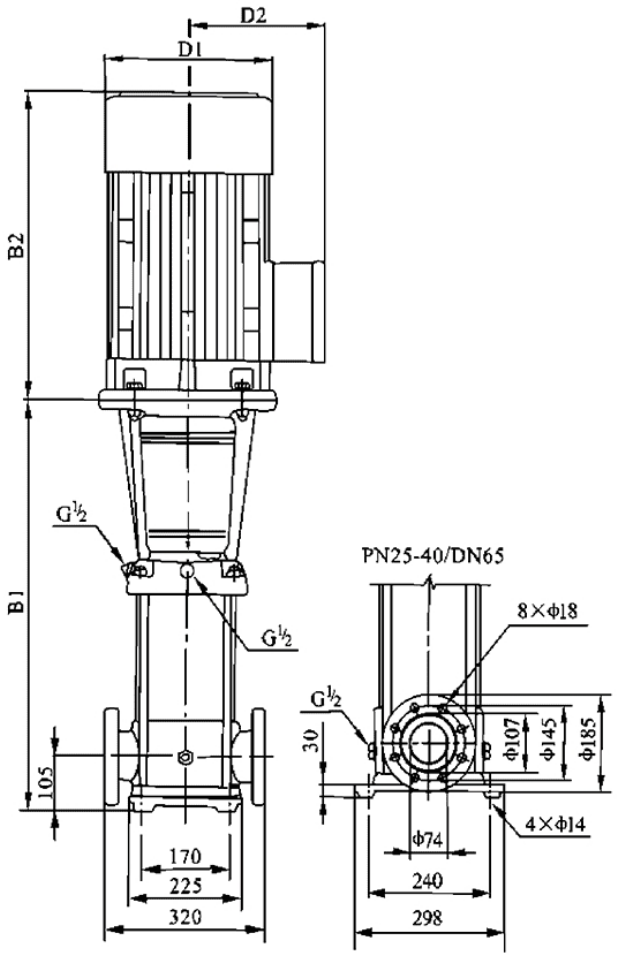

型号Model	尺寸Size (mm)					重量 Weight (kg)
	B1	B2	B1+B2	D1	D2	
CDL200-10-B	907	550	1457	330	255	311
CDL200-10-A	907	575	1482	360	285	347
CDL200-10	907	650	1557	400	310	403
CDL200-20-2B	1101	650	1751	400	310	447
CDL200-20-2A	1101	685	1786	460	340	504
CDL200-20-A	1131	760	1891	540	370	595
CDL200-20	1131	760	1891	540	370	595
CDL200-30-2B	1325	845	2170	580	410	748
CDL200-30-A-B	1325	845	2170	580	410	748
CDL200-30-2A	1325	845	2170	580	410	748
CDL200-30-B	1325	845	2170	580	410	748
CDL200-30-A	1325	845	2170	580	410	748
CDL200-30	1325	895	2220	580	410	817
CDL200-40-2B	1519	895	2414	580	410	830
CDL200-40-2A	1519	1140	2659	645	550	1180
CDL200-40-A	1519	1140	2659	645	550	1180
CDL200-40	1519	1140	2659	645	550	1180